Facility Expansion

Remington Seeds

5585 SR 571 E, Greenville, OH 45331

ARCHITECT

App Architecture
615 Woodside Drive
Englewood, Ohio 45322
(937) 836-8898

STRUCTURAL ENGINEER

L2 Engineering, LLC
7949 Washington Woods Dr.
Dayton, Ohio 45459
(513) 907-4134

GENERAL CONTRACTOR

Brumbaugh Construction
3520 State Route 49
Arcanum, Ohio 45304
(937) 692-5107

DRAWING INDEX

GENERAL

G0.1 COVER SHEET

CIVIL

C1 COVER SHEET
C2 EXISTING CONDITIONS PLAN
C3 SITE & GRADING PLAN
C4 CONCEPTUAL WATER LINE PLAN
C5 SWPPP
C6 SWPPP
C7 SWPPP

ARCHITECTURAL

A0.1 ABBREVIATIONS AND SYMBOLS
A0.4 WALL TYPES
A1.1 PARTIAL DEMOLTION & REFERENCE PLANS
A1.2 ENLARGED PLANS & SCHEDULES
A1.3 ENLARGED PLANS & SECTIONS
A1.6 ROOF PLAN
A3.1 EXTERIOR ELEVATIONS

STRUCTURAL

S0.1 GENERAL NOTES
S0.2 GENERAL NOTES
S0.3 SPECIAL INSPECTIONS
S1.0 FOUNDATION PLAN
S3.1 STRUCTURAL DETAILS
S3.2 STRUCTURAL DETAILS

* PLUMBING, MECHANICAL, ELECTRICAL, FIRE PROTECTION & TECHNOLOGY (IF APPLICABLE) SHALL BE SUBMITTED BY GENERAL CONTRACTOR AT LATER DATE.

VICINITY MAP

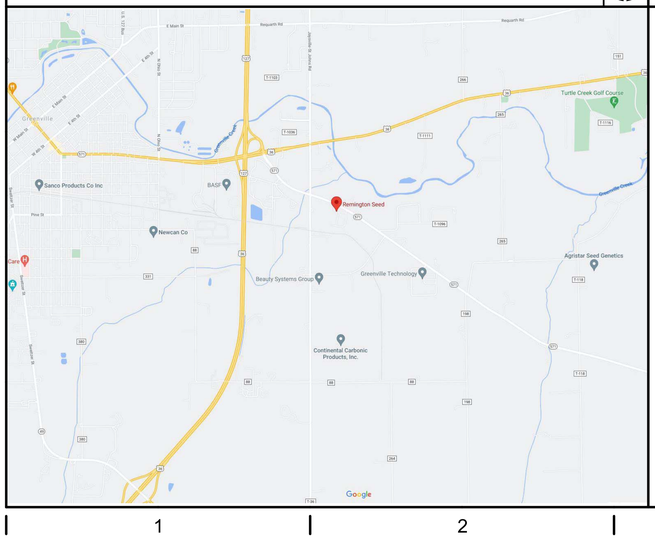

CODE INFORMATION (OBC 2017)

PROJECT DESCRIPTION

PROJECT CONSISTS OF THE DESIGN AND CONSTRUCTION OF A 55,265 SF STORAGE FACILITY AND 500 SF OFFICE ADDITIONS. CONSTRUCTION IS A SLAB-ON-GRADE, PRE-ENGINEERED METAL BUILDING, FULLY SPRINKLED AND SEPARATED BY A 3-HOUR FIREWALL SEPARATION FROM THE REMAINING, EXISTING FACILITY.

USE GROUP CLASSIFICATION

OBC (302) USE GROUP:
- S-1 (MODERATE-HAZARD STORAGE)

CONSTRUCTION TYPE CLASSIFICATION

OBC (602) CONSTRUCTION TYPE:
- IIB CONSTRUCTION

HEIGHT AND AREA LIMITATIONS

ALLOWABLE HEIGHT (TABLE 504.3): 75 FEET
ALLOWABLE AREA (506.2): 70,000 SF

PROPOSED HEIGHT: 26 FEET
PROPOSED AREA: (LESS ALLOWABLE INCREASE DUE TO OPEN PERIMETER): 55,765 SF

OCCUPANT LOAD

OBC (1001) PER TABLE 1004.1.2:
- B - BUSINESS = 1 PER 100 GROSS/ 500 SF = 5 OCCUPANTS
- S-1 - WAREHOUSE = 1 PER 500 GROSS/ 55,265 = 110 OCCUPANTS

WAREHOUSE IS NON-CONDITIONED AND NON-HEATED AND USED TO STORE SEED PRODUCT PALLETS. OCCUPANCY SHALL CONSISTENT OF FORKLIFT TRAFFIC ONLY

FIRE PROTECTION

BUILDING DESCRIPTION : FULLY SPRINKLERED

OTHER CODE PROVISIONS

OBC (T601) FIRE RESISTANCE RATINGS:

PRIMARY STRUCTURAL FRAME =	0 HRS
EXTERIOR BEARING WALLS =	0 HRS
INTERIOR BEARING WALLS =	0 HRS
EXTERIOR NON-LOAD BEARING WALLS =	0 HRS
INTERIOR NON-LOAD BEARING WALLS =	0 HRS
FLOOR CONSTRUCTION INCLUDING BEAMS =	0 HRS
ROOF CONSTRUCTION INCLUDING BEAMS =	0 HRS

KEY PLAN

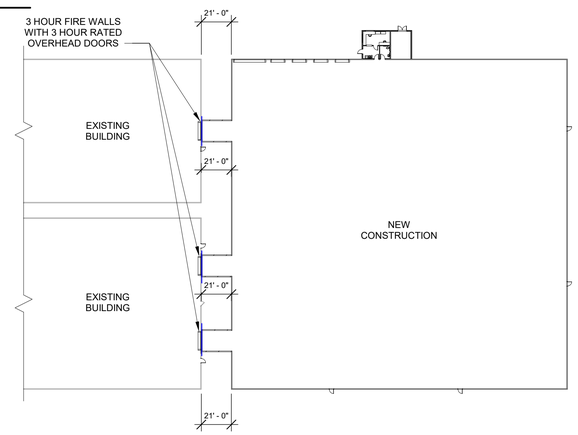

App Architecture
creative focused design
615 Woodside Drive, Englewood, Ohio 45322
T 937.836.8898 F 937.832.3696
www.app-arch.com

Facility Expansion
Remington Seeds
5585 SR 571 E, Greenville, OH 45331

ISSUE

NO.	DATE	DESCRIPTION
	08/06/21	BID SET

DATE	08/06/21
JOB NO.	3929.00
DRAWN	DRM / AJB
CHECKED	TJB

COPYRIGHT © 2021 - App Architecture, Inc.

TITLE
COVER SHEET

SHEET NO.
G0.1

12/13/2021 8:27:09 AM

DEVELOPMENT PLAN
FOR
REMINGTON SEED
LOCATED AT
5585 OH-571
CITY OF GREENVILLE, DARKE COUNTY, OHIO
OCTOBER 19, 2021

GENERAL

ALL CONSTRUCTION (METHODS AND MATERIALS SHALL BE PERFORMED IN ACCORDANCE WITH THE LATEST EDITION OF THE CITY OF GREENVILLE CONSTRUCTION AND MATERIAL SPECIFICATIONS AND STANDARD DRAWINGS AND AS SHOWN HEREON AND THE LATEST EDITION OF THE STATE OF OHIO, DEPARTMENT OF TRANSPORTATION, "CONSTRUCTION & MATERIAL SPECIFICATIONS" SHALL APPLY.

STANDARD LAYOUT NOTES

1. BUILDING DIMENSIONS SHALL BE VERIFIED BY THE CONTRACTOR WITH THE ARCHITECT'S PLANS.
2. ALL PAVEMENT MARKINGS SHALL MEET CITY OF GREENVILLE STANDARDS.
3. THE ENGINEER SHALL NOT BE RESPONSIBLE FOR THE MEANS, METHODS, PROCEDURES, TECHNIQUES, OR SEQUENCES OF CONSTRUCTION, NOR SAFETY ON THE JOB SITE, NOR SHALL THE ENGINEER BE RESPONSIBLE FOR THE CONTRACTOR'S FAILURE TO CARRY OUT THE WORK IN ACCORDANCE WITH THE CONTRACT DOCUMENTS. NEITHER THE PROFESSIONAL ACTIVITIES OF THE ENGINEER NOR THE PRESENCE OF THE ENGINEER AT A CONSTRUCTION SITE SHALL RELIEVE THE CONTRACTOR OF THEIR OBLIGATIONS, DUTIES, AND RESPONSIBILITIES INCLUDING ANY HEALTH AND SAFETY PRECAUTIONS REQUIRED BY ANY REGULATORY AGENCIES.

STORM SEWER

1. ALL CATCH BASINS WITH GRATE TYPE LIDS SHALL BE BICYCLE SAFE.
2. SEE TRENCH DETAILS FOR BACKFILL REQUIREMENTS.
3. MATERIALS SHALL CONFORM TO THE FOLLOWING:
   REINFORCED CONCRETE PIPE CONFORMING TO ASTM C-76
   REINFORCED CONCRETE PIPE JOINTS CONFORMING TO ASTM C-443
   PVC PIPE CONFORMING TO ASTM D-3034
   PVC PIPE JOINTS CONFORMING TO ASTM D-3034, D-3212
   A-2000 PIPE CONFORMING TO ASTM F-949
   A-2000 PIPE JOINTS CONFORMING TO ASTM F-3212
   PERMA-LOC OR ULTRA RIB PIPE CONFORMING TO ASTM F-794 AND AASHTO M304
   PERMA-LOC OR ULTRA RIB PIPE JOINTS CONFORMING TO ASTM D-3212
   ADS N12 WITH BELL JOINTS
4. ALL EXISTING MANHOLES AND CATCH BASINS SHALL BE CORED, AND GROUT AROUND THE INVERT OF THE PROPOSED CONDUIT
5. ALL STORM MANHOLE CASTINGS SHALL BE NEENAH R-1767 WITH 4 HOLE VENTED LIDS.
6. CATCH BASINS ARE TYPE ODOT 2-2B AS SHOWN ON THE PLANS UNLESS OTHERWISE NOTED.
7. ALL STORM PIPE TO BE ADS N-12 UNLESS OTHERWISE NOTED.

WATER LINE NOTES

1. ALL WATER MAIN AND LATERALS SHALL BE INSTALLED A MINIMUM OF 60" DEEP AND COVERED WITH 1/4" NATURAL ROUNDS OR SMALLER, SHALL BE LAID WITH AT LEAST A TEN FOOT (10') HORIZONTAL SEPARATION FROM ANY SANITARY SEWER LINE AND SHALL BE LAID AT LEAST EIGHTEEN INCHES (18") VERTICAL SEPARATION FROM ANY SANITARY IN ACCORDANCE WITH THE "TEN STATE STANDARDS."

   UTILITY CROSSING:
   WATER LINE OVER SEWER; MINIMUM 18" VERTICAL SEPARATION. ONE FULL LENGTH OF WATER MAIN PIPE SHALL BE CENTERED AT THE POINT OF CROSSING SUCH THAT BOTH JOINTS WILL BE EQUIDISTANT AND AS FAR FROM THE SEWER AS POSSIBLE.
   WATER LINE UNDER SANITARY SEWER; MINIMUM 18" VERTICAL SEPARATION. ONE LENGTH (13' MINIMUM) OF PIPE SHALL BE CENTERED AT THE POINT OF CROSSING SUCH THAT EACH END IS EQUIDISTANT FROM THE WATER MAIN. ADEQUATE STRUCTURAL SUPPORT FOR THE SEWER IS REQUIRED.

2. THRUST BLOCKS OR RESTRAINED LENGTH ON ALL FITTINGS OF WATER LINE CONSTRUCTION AS PER CITY OF GREENVILLE STANDARDS.
3. NO SERVICE CONNECTIONS SHALL BE MADE TO THE WATER MAIN UNTIL THE MAIN LINE HAS BEEN TESTED, INSPECTED AND RELEASED FOR TAPS BY THE MUNICIPALITY.
4. SEE TRENCH DETAILS FOR BACKFILL REQUIREMENTS.
5. WATER LATERAL SHALL BE PROVIDED AS SHOWN IN THE PLANS TO WITHIN 5' OF BUILDING, AND CAPPED. THE CAPPED END SHALL BE MARKED USING A 4x4 EXTENDING 4 FEET ABOVE GRADE AND PAINTED BLUE.
6. WATER LATERAL SHALL BE TAPPED INTO THE EXISTING MAIN BY THE CITY OF GREENVILLE STANDARDS AND IN ACCORDANCE WITH THE REQUIREMENTS OF THE CITY OF GREENVILLE.
7. AN ASSE 1013 DEVICE MUST BE INSTALLED AFTER THE WATER METER AND TESTED IMMEDIATELY AFTER INSTALLATION.
8. SEE SHEET 4 OF 6 FOR STANDARD FIRE HYDRANT DETAIL AND NOTES.

SANITARY SEWER NOTES

1. ALL SANITARY SEWERS AND APPURTENANCES SHALL BE CONSTRUCTED ACCORDING TO THE CITY OF GREENVILLE SANITARY DEPARTMENT SPECIFICATIONS AND THE CURRENT STATE OF OHIO ENVIRONMENTAL PROTECTION AGENCY RULE AND REGULATIONS.
2. SANITARY SEWER PIPE AND FITTING SHALL BE POLYVINYL CHLORIDE (PVC) CONFORMING TO ASTM D-3034, SDR 35, SANITARY SEWER PIPE JOINTS SHALL CONFORM TO ASTM D-3212 FOR POLYVINYL CHLORIDE (PVC) PIPE, UNLESS OTHERWISE NOTED.

SITE INFORMATION

CURRENT AND PROPOSED ZONING: GENERAL INDUSTRIAL DISTRICT
EXISTING USE & PROPOSED USE: PROCESSING AND DISTRIBUTION OF SEED

TOTAL ACREAGE OF SITE = 15.013

PROPOSED SITE INFORMATION

TOTAL ACREAGE OF PROPOSED SITE IMPROVEMENTS = 1.63 ACRES
IMPERVIOUS AREA ADDED

NUMBER OF PARKING SPACES ADDED = 2 PARKING SPACES

LOCATION MAP
NTS

SHEET INDEX

C1 COVER SHEET
C2 EXISTING CONDITIONS PLAN
C3 SITE & GRADING PLAN DETAILS
C4 WATER LINE PLAN
C5 SWPPP
C6 SWPPP
C7 SWPPP

EXISTING UTILITIES:

EXISTING UNDERGROUND UTILITIES & SERVICES ARE SHOWN IN THEIR APPROXIMATE LOCATIONS ACCORDING TO THE BEST INFORMATION AVAILABLE. SOURCES BEING, PLANS PROVIDED BY THE CITY OF MARYSVILLE, OUPS MARKINGS, AND A UTILITY LOCATE SCAN BY UNDERGROUND DETECTIVE COMBINED WITH OBSERVED EVIDENCE OF UTILITIES, TO DEVELOP A VIEW OF THOSE UNDERGROUND UTILITIES; HOWEVER LACKING EXCAVATION, THE EXACT LOCATION CANNOT BE DETERMINED. THE LOCATIONS SHOWN ARE INTENDED ONLY AS A GUIDE & CANNOT BE GUARANTEED ACCURATE. THE CONTRACTOR SHALL BE RESPONSIBLE FOR:

A. CONTACTING ALL UTILITY OWNERS TEN DAYS PRIOR TO CONSTRUCTION & ADVISING THEM OF THE WORK TO TAKE PLACE.
B. SOLICITING THEIR AID IN LOCATING & PROTECTING ANY UTILITY WHICH MAY INTERFERE WITH CONSTRUCTION.
C. EXCAVATING & VERIFYING THE HORIZONTAL & VERTICAL LOCATION OF EACH UTILITY.
D. ALL DAMAGE TO ANY EXISTING UTILITY.

THE FOLLOWING ARE KNOWN OWNERS OF UNDERGROUND UTILITIES WHO SHALL BE NOTIFIED TEN DAYS PRIOR TO CONSTRUCTION TO FIELD LOCATE SAID UTILITIES. THE CONTRACTOR SHALL NOTIFY THE BELOW UTILITY OWNERS, OUPS (1-800-362-2764) & DIRECTLY NOTIFY ANY NON-MEMBERS OF OUPS. IF, DURING CONSTRUCTION, INTERFERENCE ARISES WITH EXISTING UTILITIES IT SHALL BE THE RESPONSIBILITY OF THE CONTRACTOR TO NOTIFY THE UTILITY COMPANY INVOLVED. ANY AND ALL WORK REQUIRED FOR PUBLIC OR PRIVATE UTILITIES WILL BE DONE BY AND AT THE EXPENSE OF THE CONTRACTOR.

ELECTRIC
AES OHIO
(800) 253-5801

GAS
VECTREN/CENTERPOINT
(800) 227-1376

TELECOMMUNICATIONS
CENTURYLINK
(877) 862-9343

SPECTRUM
(833) 267-6094

STORM, WATER & SANITARY
CITY OF GREENVILLE
SAN PHONE: (937) 548-3530
STM PHONE: (937) 548-1815
WTR PHONE: (937) 548-2415

OHIO Utilities Protection SERVICE
Click, Call or Tap Before You Dig
2 WORKING DAYS BEFORE YOU DIG
CALL TOLL FREE 800-362-2764

TICKET REFERENCE NUMBER:
A115802272-00A

APPLICANT:
REMINGTON SEED
5585 OH-571, GREENVILLE, OH 45331
937.548.4193

DEVELOPER:
BRUMBAUGH CONSTRUCTION
3520 S.R. 49, ARCANUM, OH 45331
937.564.3431

PREPARED BY:
BRUMBAUGH ENGINEERING & SURVEYING, LLC
2270 SOUTH MIAMI STREET
WEST MILTON, OHIO 45383
PHONE (937) 698-3000
FAX (937) 698-3928

STATE OF OHIO
STEVEN R. FOX
E-82926
REGISTERED PROFESSIONAL ENGINEER

10/19/2021
STEVEN R. FOX
REGISTERED ENGINEER OF OHIO NO. 82926

Revisions

NO.	DATE	DESCRIPTION	BY
1			SRF

FOR CONSTRUCTION

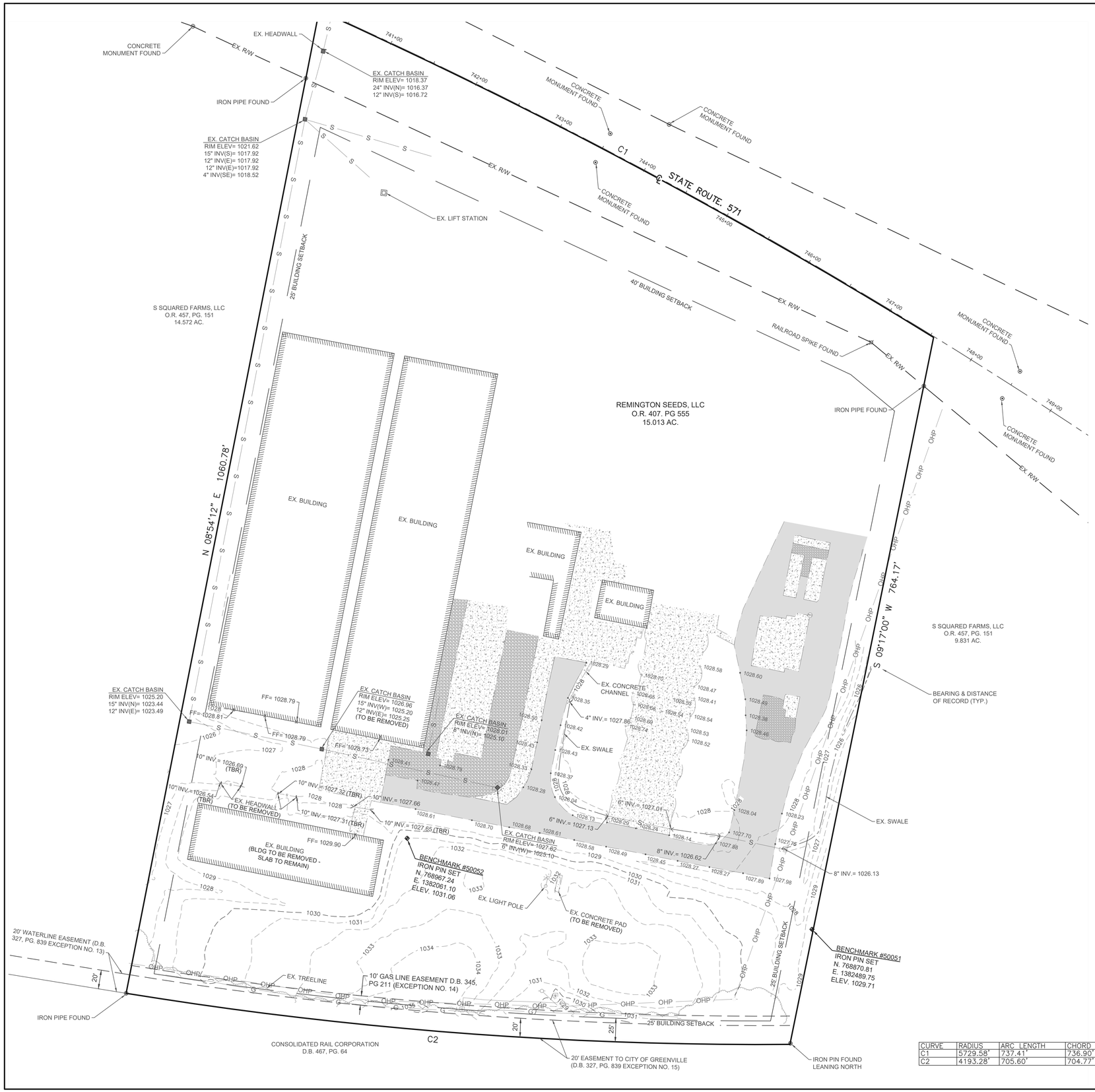

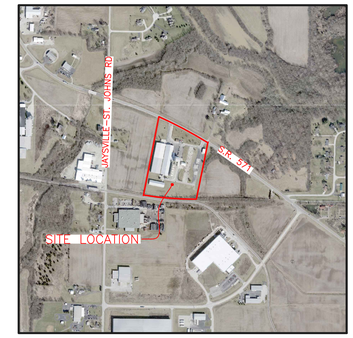

LOCATION MAP

NTS

LEGEND

- EXISTING POWER POLE
- EXISTING GAS METER
- EXISTING GAS VALVE
- EXISTING LIGHT POLE
- EXISTING CATCH BASIN
- EXISTING ASPHALT
- EXISTING CONCRETE
- EXISTING GRAVEL
- OHP — EXISTING OVERHEAD POWER
- G — EXISTING GAS
- S — EXISTING STORM
- 1028.43 — EXISTING PAVEMENT ELEVATION
- 1028.53 — EXISTING CONCRETE ELEVATION

SURVEY NOTES:

1. PROPERTY LINE LOCATIONS, BEARINGS AND DISTANCES SHOWN ARE FROM RECORDED INFORMATION.
2. THIS SURVEY IS FOR TOPOGRAPHICAL PURPOSES ONLY. ALL TOPOGRAPHICAL FEATURES SHOWN ARE EITHER FROM ABOVE GROUND FEATURES READILY OBSERVABLE, OR FROM EXISTING RECORDS WHOSE ACCURACY CAN NOT BE CERTIFIED BY US.

BASIS OF HORIZONTAL AND VERTICAL CONTROL:

THE PROJECT CONTROL POINTS AND BENCHMARKS ARE BASED ON THE OHIO STATE PLANE COORDINATE SYSTEM, SOUTH ZONE, NAD83 FOR HORIZONTAL LOCATION AND NAVD88 DATUM FOR VERTICAL ELEVATIONS.

CURVE	RADIUS	ARC LENGTH	CHORD LENGTH	CHORD BEARING	DELTA ANGLE
C1	5729.58'	737.41'	736.90'	S 64°11'01" E	7°22'27"
C2	4193.28'	705.60'	704.77'	N 87°47'57" W	9°38'28"

PLAN NORTH

NORTH

2 WORKING DAYS BEFORE YOU DIG
CALL TOLL FREE 800-362-2764
OHIO UTILITIES PROTECTION SERVICE

HORIZONTAL SCALE 1"=50'
0' 50' 100' 150'

BRUMBAUGH ENGINEERING & SURVEYING, LLC
2270 SOUTH MIAMI STREET
WEST MILTON, OHIO 45383
PHONE: (937) 698-3000
FAX: (937) 698-3928
EMAIL: John@bes-engineer.com

STATE OF OHIO
STEVEN R. FOX
E-82926
REGISTERED PROFESSIONAL ENGINEER

REGISTERED ENGINEER OF OHIO
NO: 82926
STEVEN R. FOX 10/19/2021

PROJECT NO.:	452.21
DATE:	10/19/2021
DRAWN BY:	SRF
DESIGNED BY:	
CHECKED BY:	JJB
REVISED	
1.	
2.	
3.	
4.	
5.	
6.	
7.	

EXISTING CONDITIONS PLAN
FOR
REMINGTON SEED
LOCATED AT
5585 S.R.-571 CITY OF GREENVILLE, DARKE CO. OHIO

SHEET C2 OF 7

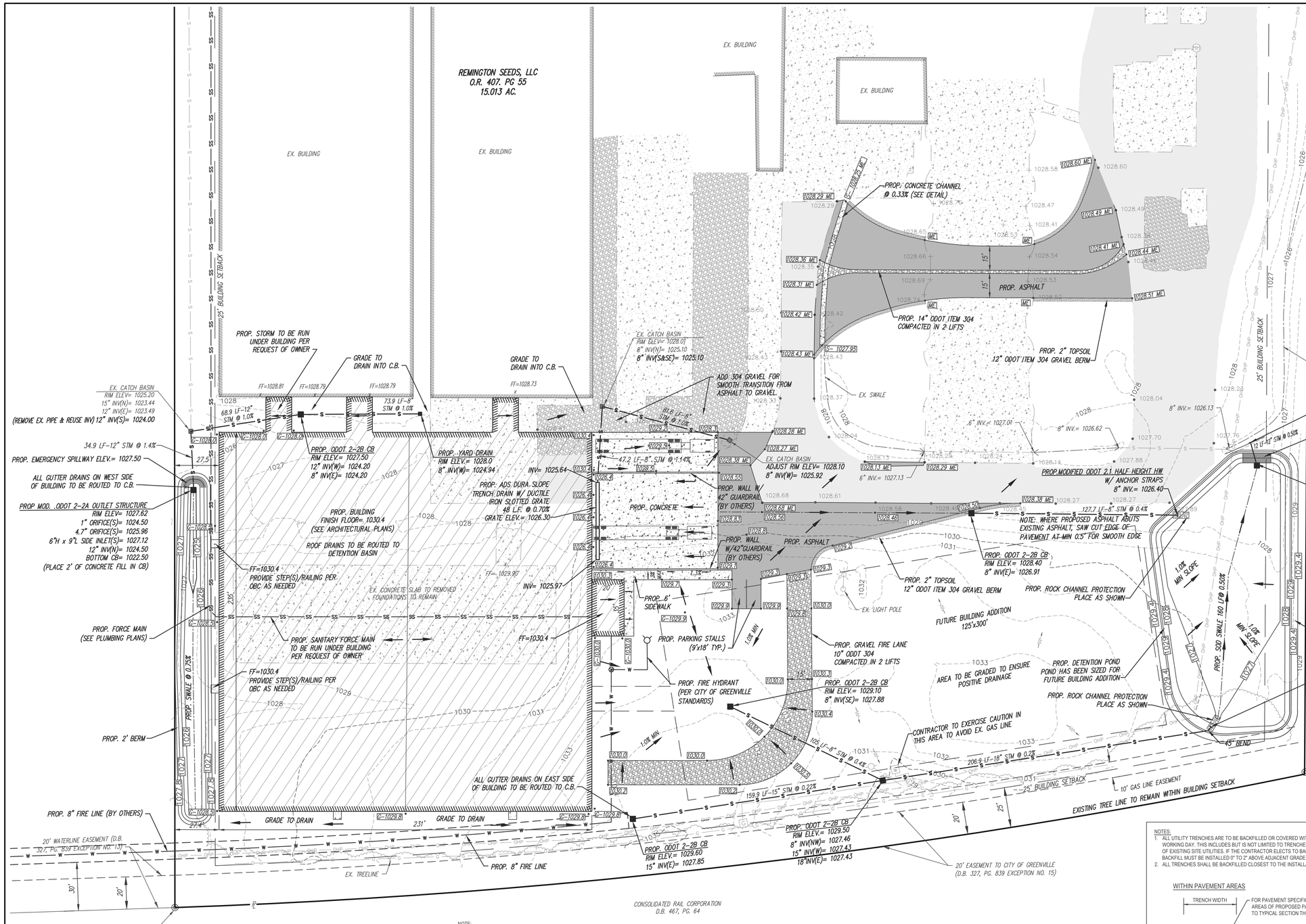

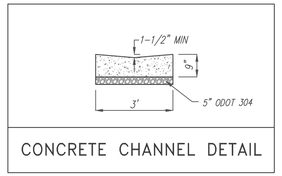

CONCRETE CHANNEL DETAIL

PLAN NORTH

NORTH

2 WORKING DAYS BEFORE YOU DIG
CALL TOLL FREE 800-362-2764
OHIO UTILITIES PROTECTION SERVICE

HORIZONTAL SCALE 1"=30'
0' 30' 60' 90'

BRUMBAUGH ENGINEERING & SURVEYING, LLC
2270 SOUTH MIAMI STREET
WEST MILTON, OHIO 45383
PHONE: (937) 698-3000
FAX: (937) 698-3928
EMAIL: John@bes-engineer.com

STATE OF OHIO
STEVEN R. FOX
E-82926
REGISTERED PROFESSIONAL ENGINEER

REGISTERED ENGINEER OF OHIO
NO: 82926
STEVEN R. FOX 10/19/2021

PROJECT NO.:	452.21
DATE:	10/19/2021
DRAWN BY:	SRF
DESIGNED BY:	SRF
CHECKED BY:	JJB

REVISED

1. (12.8.21)REVISED WATER VALVE LOCATION.
2.
3.
4.
5.
6.
7.

SITE & GRADING PLAN
FOR
REMINGTON SEED
LOCATED AT
5585 S.R.-571 CITY OF GREENVILLE, DARKE CO. OHIO

NOTE:
REFER TO TYPICAL TRENCH DETAIL FOR BACKFILL REQUIREMENTS

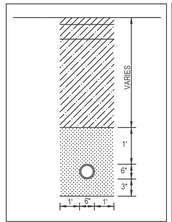

CROSS SECTION
SANITARY LATERAL

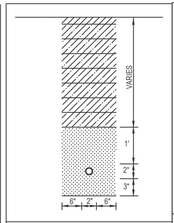

CROSS SECTION
WATER LATERAL

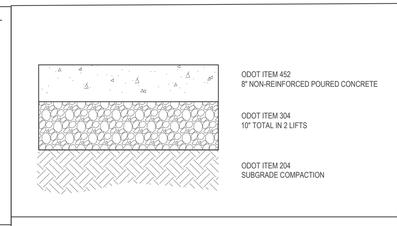

CONCRETE TYPICAL SECTION
LOADING DOCK AREA

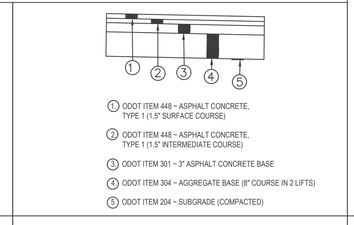

TYPICAL SECTION
HEAVY DUTY ASPHALT PAVEMENT

NOTES:
1. ALL UTILITY TRENCHES ARE TO BE BACKFILLED OR COVERED WITH STEEL PLATES AT THE END OF EACH WORKING DAY. THIS INCLUDES BUT IS NOT LIMITED TO TRENCHES CREATED DURING THE DEMOLITION OF EXISTING SITE UTILITIES. IF THE CONTRACTOR ELECTS TO BACKFILL UTILITY TRENCHES THE BACKFILL MUST BE INSTALLED 0" TO 2' ABOVE ADJACENT GRADE.
2. ALL TRENCHES SHALL BE BACKFILLED CLOSEST TO THE INSTALLATION & NOT LEFT UNATTENDED.

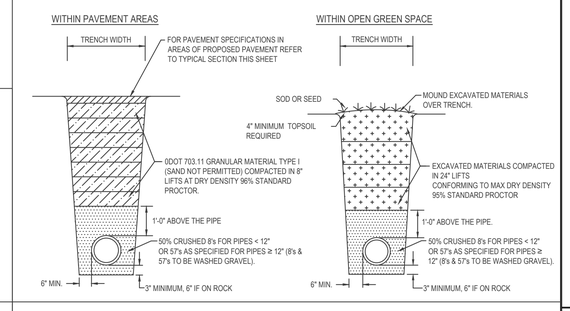

STORM SEWER AND SANITARY UTILITY TRENCH
EXCAVATION AND BACKFILL REQMTS.

SHEET C3 OF 7

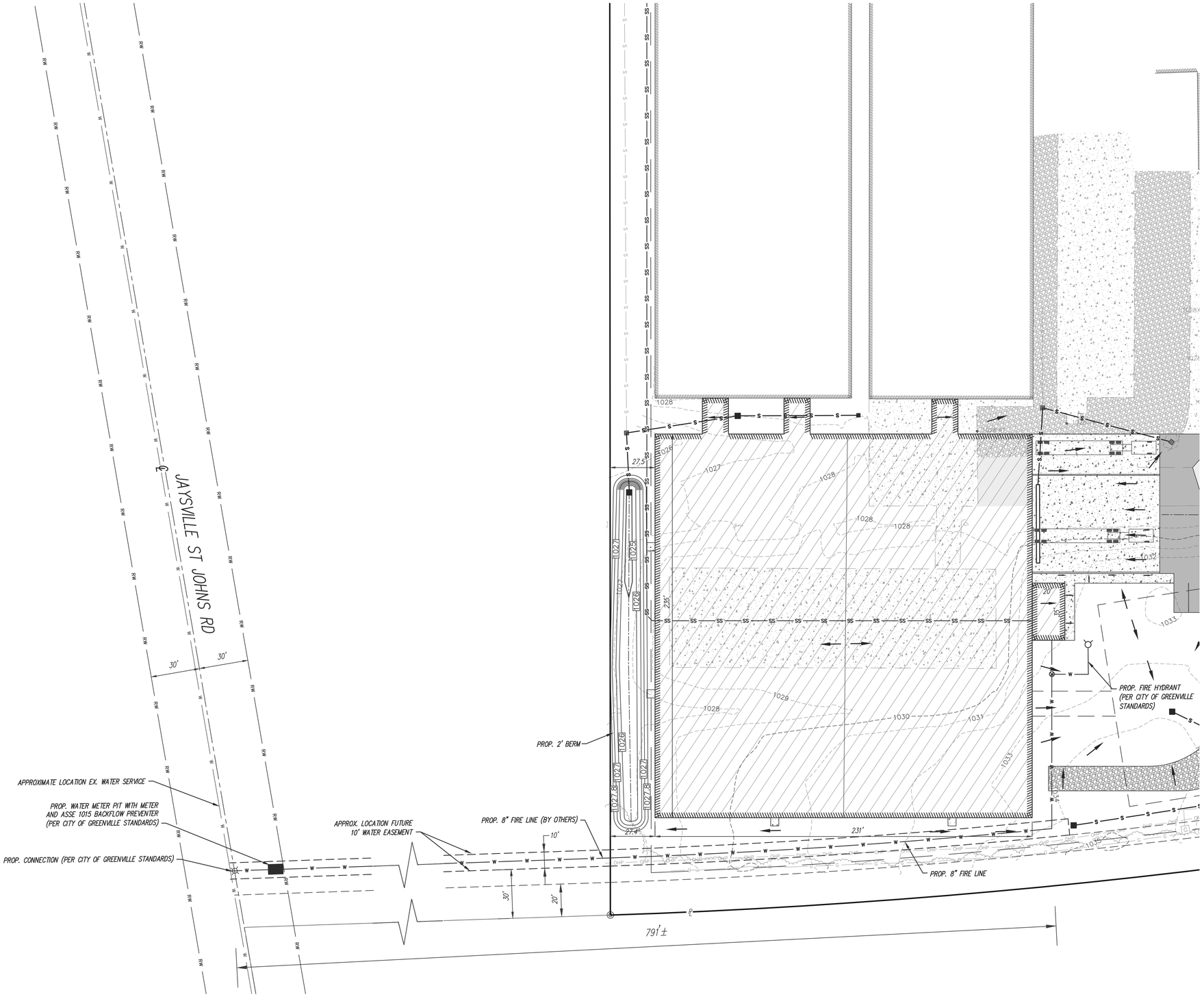

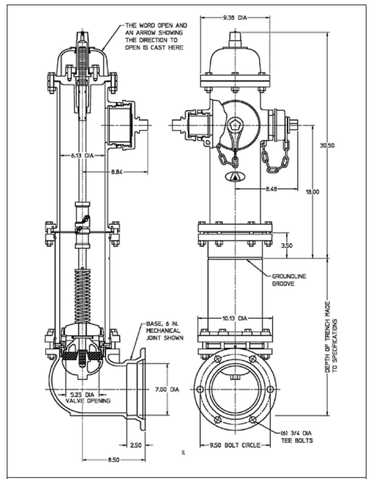

5-1/4" AMERICAN-DARLING® B-84-B-5
STANDARD DETAIL

FIRE HYDRANT NOTES:

- MANUFACTURER - AMERICAN FLOW CONTROL
- MODEL AMERICAN DARLING B84B-5
- DEPTH - 5' TYPICAL OR APPROVED FOR SPECIFIC APPLICATION
- PUMPER - 1 QTY. 5 STORTZ COUPLING LOK
- SIDE HOSE - 2 QTY: 2-1/2" 3.11 PITCH DIAMETER X 6 THREADS PER INCH (TPI)

ADDITIONAL SPECS:

- NO CHAINS
- B05 NUT AND CAP
- OPEN RIGHT
- STAINLESS STEEL PIPE PLUG (NON-SELF DRAINING)
- STAINLESS STEEL SPRING
- STAINLESS STEEL UPPER ROD
- STAINLESS STEEL LOWER ROD
- 6" MJ OR 6" ALPHA FASHION BONDED EPOXY BASE
- ORIENTATED 0 DEGREES
- DUCTILE IRON CASTING TOP WITH FUSION BONDED EPOXY
- EPDM RUBBER HYDRANT VALVE
- DUCTILE IRON CASTING VALVE BOTTOM WITH FUSION BONDED EPOXY
- 316 STAINLESS STEEL ABOVE GRADE BOLTING
- 316 STAINLESS STEEL BELOW GRADE BOLTING
- HYDRANT PAINT: SAFETY YELLOW

FIRE WATER LINE NOTES:

- 8" FIRE LINE TO BE C-900 PIPING
- ALL WATERLINE MAIN & JOINTS TO BE RESTRAINED PER CITY STANDARDS.
- PIPE TO BE INTERNALLY RESTRAINED (RIEBERLOK OR FIELDLOK GASKETS).
- ALL FITTINGS TO BE MECHANICALLY RESTRAINED.
- NON-POTABLE USE ONLY.

METER PIT NOTES:

- SUMP PUMP TO BE INSTALLED TO PREVENT FLOODING.
- METER SHOULD BE A 8" MASTER METER OCTAVE READING ALL DIGITS DOWN TO 1 CUBIC FOOT AND TRPL CONNECTOR.
- RADIO TO BE A SENSUS SMARTPOINT FOR FIXED BASE SYSTEMS 520 M PIT SET MODULE.
- CONTRACTOR TO COORDINATE LOCATION OF ELECTRIC LINE WITH OWNER.

NOTES: OFFSITE IS SHOWN FOR CONCEPT ONLY.
WATER LINE TO BE DESIGNED/BUILT BY OTHERS.

PLAN NORTH

NORTH

2 WORKING DAYS BEFORE YOU DIG
CALL TOLL FREE 800-362-2764
OHIO UTILITIES PROTECTION SERVICE

HORIZONTAL SCALE 1"=30'
0' 30' 60' 90'

BRUMBAUGH ENGINEERING & SURVEYING, LLC
2270 SOUTH MIAMI STREET
WEST MILTON, OHIO 45383
PHONE: (937) 698-3000
FAX: (937) 698-3928
EMAIL: John@bes-engineer.com

STATE OF OHIO
STEVEN R. FOX
E-82926
REGISTERED PROFESSIONAL ENGINEER

REGISTERED ENGINEER OF OHIO
NO: 82926
STEVEN R. FOX 10/19/2021

PROJECT NO.:	452.21
DATE:	10/19/2021
DRAWN BY:	SRF
DESIGNED BY:	SRF
CHECKED BY:	JJB

REVISED

1. (12.8.21)REVISED WATER VALVE LOCATION
2. (12.8.21)REVISED WATER LINE NOTES
3.
4.
5.
6.
7.

CONCEPTUAL WATER LINE PLAN
FOR
REMINGTON SEED
LOCATED AT
5585 S.R.-571 CITY OF GREENVILLE, DARKE CO. OHIO

STORM WATER POLLUTION PREVENTION PLAN

DESCRIPTION OF CONSTRUCTION ACTIVITIES:

CONSTRUCTION ACTIVITIES WILL CONSIST OF IMPROVEMENTS ON A 15.013 ACRE LOT. IMPROVEMENTS WILL INCLUDE A BUILDING ADDITION, ASPHALT DRIVE EXPANSION, AND A STORM WATER DETENTION BASIN. NO IMPROVEMENTS WILL BE WITHIN THE PUBLIC RIGHT-OF-WAY.

SCHEDULE:
PROJECT START DATE: 7/1/2021
PROJECTED COMPLETION DATE: 7/1/2022
THIS PROJECT IS FOR THE DEVELOPMENT OF A COMMERCIAL BUSINESS (REMINGTON SEED) IN THE CITY OF GREENVILLE, OHIO. THE IMPLEMENTATION SCHEDULE FOR THIS PROJECT IS AS FOLLOWS:

1. SILT FENCE IN PLACE & ALL EROSION CONTROL DEVICES AS APPLICABLE.
2. CLEARING OF TREES AND BRUSH NOT PREVIOUSLY CLEARED IN THE PROPOSED PAVEMENT AND BUILDING AREAS AS WELL AS THE AREA OF THE PROPOSED DETENTION POND AS PER THIS SWP3 PLAN.
3. GRADING OF THE SITE, INCLUDING DETENTION POND.
4. INSTALLATION OF STORM SEWER.
5. ASPHALT PAVEMENT AREA.
6. SEED AND STABILIZE SITE.
7. REMOVE TEMPORARY EROSION CONTROL FEATURES.

THIS SWP3 PLAN HAS BEEN PREPARED FOR CONTINUATION OF THE CONSTRUCTION PHASE OF THE PROJECT.

SUMMARY OF SITE AREA:

TOTAL SITE AREA	15.013 ACRES
AREA OF DISTURBANCE OR PROPOSED IMPROVEMENTS	2.16 ACRES

RECEIVING WATERS:
TRIBUTARY TO GREENVILLE CREEK.

RUNOFF COEFFICIENT (AREA OF IMPROVEMENTS):
TOTAL AREA FOR PROPOSED IMPROVEMENTS: 3.08 ACRES

PRE-CONSTRUCTION:

LAND USE	SOIL TYPE	AREA(ACRES)	CN
GRASS (GOOD)	C	2.62	74
IMPERVIOUS	C	0.46	98

WEIGTHED CN= 79

POST-CONSTRUCTION:

LAND USE	SOIL TYPE	AREA(ACRES)	CN
GRASS(GOOD)	C	1.39	74
IMPERVIOUS	C	1.63	98
GRAVEL	C	0.06	89

WEIGTHED CN= 87

IMPERVIOUS AREA:

PRE-CONSTRUCTION	18.83%
POST-CONSTRUCTION	52.92%

NATIVE SOIL INFORMATION:
CLASSIFICATION:
CrA
MmB
MmC2

DESCRIPTION:
(CrA): CROSBY SILT LOAM, SOUTHERN OHIO TILL PLAIN, 0 TO 2 PERCENT SLOPES
(MmB): MIAMIAN SILT LOAM, 2 TO 6 PERCENT SLOPES
(MmC2): MIAMIAN SILT LOAM, 6 TO 12 PERCENT SLOPES, ERODED

HYDROLOGIC SOIL GROUP:
(CrA)=C/D
(MmB)=C
(MmC2)=C

PERMIT APPLICATION:
1. THE CONTRACTOR/OWNER SHALL OBTAIN A (NOI) NPDES PERMIT FROM THE OHIO ENVIRONMENTAL PROTECTION AGENCY (OEPA) FOR STORM WATER DISCHARGES ASSOCIATED WITH CONSTRUCTION ACTIVITY PER ODOT SUPPLEMENTAL SPECIFICATION 832.
2. AFTER FINAL STABILIZATION OF THE SITE, THE OWNER SHALL SUBMIT A "NOTICE OF TERMINATION" (NOT) TO OHIO ENVIRONMENTAL PROTECTION AGENCY (OEPA). A COPY OF THIS NOTICE SHALL BE FORWARDED TO THE PROJECT ENGINEER.

WETLANDS CLASSIFICATION:
NON-APPLICABLE

MAINTENANCE/INSPECTION PROCEDURES:
1. THE CONTRACTOR SHALL BE RESPONSIBLE FOR INSPECTING THE CONTROLS EVERY 7 DAYS OR WITHIN 24 HOURS OF A STORM WITH 0.5 INCH OR MORE IN DEPTH AND MAINTAIN WRITTEN RECORDS OF INSPECTION DATES, TIMES, DEFECTS, AND CORRECTIVE ACTIONS.
2. THE CONTRACTOR SHALL MAINTAIN WRITTEN RECORDS OF THE FOLLOWING:
   A. MAJOR GRADING ACTIVITY DATES BY PARTICULAR AREA.
   B. DATES WHEN CONSTRUCTION ACTIVITIES CEASED TEMPORARILY OR PERMANENTLY.
   C. DATES WHEN AN AREA IS TEMPORARILY OR PERMANENTLY STABILIZED.
   D. ANY REQUIRED PLAN UPDATES

CONTROLS:
1. STORMWATER MANAGEMENT SHALL BE PROVIDED BY SIDE DITCHES AND/OR SWALES AND AS SHOWN ON THE ATTACHED PLAN, IN ADDITION TO TEMPORARY SEDIMENT POND AND SEDIMENT CONTROL ON INLETS.
2. WASTE DISPOSAL SHALL CONSIST OF ALL CONSTRUCTION SITE WASTE BEING PROPERLY AND PROMPTLY REMOVED FROM THE SITE IN ACCORDANCE WITH ODOT ITEM 202.
3. TEMPORARY SANITARY FACILITIES SHALL BE PROVIDED BY THE CONTRACTOR FOR EMPLOYEES DURING CONSTRUCTION.
4. OFFSITE VEHICLE TRACKING SHALL BE REDUCED BY SWEEPING THE EXISTING HIGHWAYS ADJACENT TO THE SITE ENTRANCES AS NECESSARY TO REMOVE ANY EXCESS MUD, DIRT, OR ROCK TRACKED FROM THE SITE. ALL DUMP TRUCKS HAULING MATERIAL TO AND FROM THE SITE SHALL BE PROPERLY COVERED.

INSPECTION REPORTS:
CONTRACTOR SHALL BE RESPONSIBLE FOR SENDING INSPECTION REPORTS IF REQUESTED - RETAIN HARD COPY ONSITE FOR REVIEW BY OEPA AND/OR CITY.

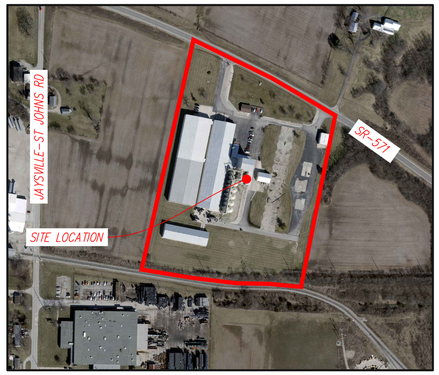

LOCATION MAP
NTS

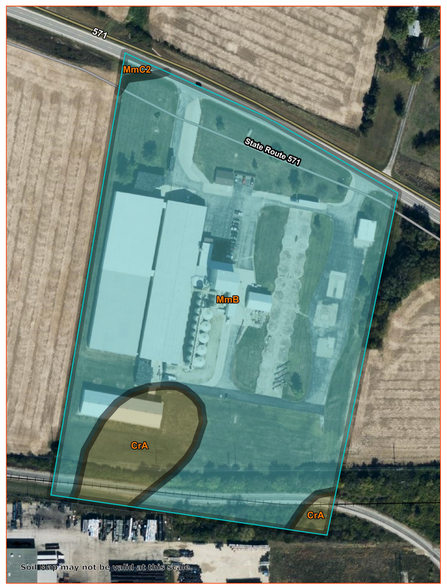

SOIL SITE MAP
NTS

STORMWATER POLLUTION PREVENTION PLAN GENERAL NOTES & REQUIREMENTS

ADMINISTRATIVE REQUIREMENTS
1. IF SITE DISTURBANCE IS GREATER THAN I ACRE, FILE THE NOI WITH OHIO EPA AT LEAST 21 DAYS PRIOR TO THE START OF ANY CONSTRUCTION.
2. IF PROJECT IS WITHIN AN URBANIZED AREA (UA) OR AREA WHERE THERE IS LOCAL APPROVAL OF SEDIMENT AND EROSION CONTROL PLANS, A COPY OF THE NOI MUST ALSO BE SUBMITTED TO THE LOCAL APPROVING AGENCY.
3. NO CONSTRUCTION ACTIVITIES MAY BEGIN UNTIL YOU RECEIVE A DIRECTORS AUTHORIZATION LETTER GRANTING COVERAGE UNDER THE NPDES PERMIT.
4. A COPY OF THE NOI, DIRECTORS AUTHORIZATION LETTER AND STORMWATER POLLUTION PREVENTION PLAN (SWP3) MUST BE KEPT ON SITE DURING WORKING HOURS.
5. AMEND THE SWP3 WHENEVER THERE IS A CHANGE IN SITE DESIGN, CONSTRUCTION, OPERATION OR MAINTENANCE THAT REQUIRES THE INSTALLATION OF BEST MANAGEMENT PRACTICES (BMPs) OR MODIFICATIONS TO EXISTING BMPs.
6. WHILE THE SWP3 IS NOT TYPICALLY SUBMITTED TO OHIO EPA AT THE TIME THE NOI IS FILED, OHIO EPA MAY REVIEW THE SWP3 AT ANY TIME. IF OHIO EPA REQUESTS CHANGES TO THE SWP3 IN WRITING, THEY MUST BE MADE WITHIN 7 DAYS OF THE REQUEST.
7. MAINTAIN A WRITTEN DOCUMENT ACKNOWLEDGING UNDERSTANDING OF THE SWP3 AND RESPONSIBILITIES UNDER THE PLAN SIGNED BY ALL CONTRACTORS AND SUBCONTRACTORS INVOLVED IN THE IMPLEMENTATION OF THE SWP3.
8. FORTY-EIGHT HOURS PRIOR TO ANY EARTH DISTURBING WORK, THE CONTRACTOR SHALL NOTIFY THE VILLAGE DEPARTMENT OF WATER.

REQUIREMENTS REGARDING EROSION CONTROLS
1. BMP's, WHICH PRESERVE THE EXISTING NATURAL SITE CONDITION AS MUCH AS FEASIBLE ARE REQUIRED TO BE UTILIZED IN THE SWP3, SUCH AS PHASED CONSTRUCTION TO MINIMIZE LAND DISTURBED AT ANY ONE TIME, PRESERVING RIPARIAN AREAS AND LEAVING EXISTING VEGETATION IN PLACE FOR AS LONG AS POSSIBLE.
2. STABILIZATION OF DISTURBED AREAS MUST BE INITIATED WITHIN 7 DAYS OF REACHING FINAL GRADE.
3. AREAS WITHIN 50 FEET OF A STREAM (INCLUDING INTERMITTENT STREAMS) MUST BE STABILIZED WITHIN 2 DAYS OF THE MOST RECENT DISTURBANCES.
4. TEMPORARY STABILIZATION OF DISTURBED AREAS THAT WILL BE REWORKED, BUT NOT FOR 21 DAYS OR MORE FROM THE DATE THEY WERE LAST DISTURBED, MUST BE INITIATED WITHIN 7 DAYS OF LAST DISTURBANCE.
5. DISTURBED AREAS INTENDED TO BE LEFT IDLE OVER WINTER MUST BE STABILIZED PRIOR TO THE ONSET OF WINTER WEATHER, I.E., SUSTAINED SNOW COVER OR FROZEN GROUND CONDITIONS.
6. SPECIAL MEASURES MUST BE TAKEN AS NECESSARY TO STABILIZE DRAINAGE CHANNELS AND STORM WATER OUTFALLS.
7. RUNOFF MUST BE DIVERTED AWAY FROM DISTURBED AREAS AND STEEP SLOPES WHEREVER PRACTICABLE.
8. **PROPERTIES ADJACENT TO THE SITE OF LAND DISTURBANCE WILL BE PROTECTED FROM SEDIMENT DEPOSITION. THIS WILL BE ACCOMPLISHED BY PRESERVING A WELL VEGETATED BUFFER STRIP AROUND THE LOWER PERIMETER OF LAND DISTURBANCE. BY INSTALLING PERIMETER CONTROLS SUCH AS SEDIMENT TRAPS, FILTERS OR DIKES, OR SEDIMENT BASINS, OR BY A COMBINATION OF SUCH MEASURES. VEGETATED FILTER STRIPS MAY BE USED ALONE ONLY WHERE THE RUNOFF IN SHEET FLOW IS EXPECTED. FILTER STRIPS SHOULD BE AT LEAST 15 FEET IN WIDTH. IF AT ANY TIME IT IS FOUND THAT A VEGETATED FILTER STRIP ALONE IS INEFFECTIVE IN STOPPING SEDIMENT MOVEMENT INTO ADJACENT PROPERTY, ADDITIONAL PERIMETER CONTROLS MUST BE PROVIDED.**
9. CUT AND FILL SLOPES WILL BE DESIGNED AND CONSTRUCTED IN A MANNER WHICH WILL MINIMIZE EROSION. SLOPES WHICH ARE FOUND TO BE ERODING EXCESSIVELY WITHIN ONE YEAR OF CONSTRUCTION WILL BE PROVIDED WITH ADDITIONAL SLOPE STABILIZING MEASURES UNTIL THE PROBLEM IS CORRECTED.

REQUIREMENTS REGARDING SEDIMENT CONTROLS
1. PLAN SEDIMENT CONTROLS FOR ANY AREA THAT WILL REMAIN DISTURBED FOR 14 DAYS OR LONGER.
2. SEDIMENT CONTROLS MUST POND RUNOFF IN ORDER TO BE CONSIDERED FUNCTIONAL.
3. SEDIMENT BARRIERS, SUCH AS SILT FENCE OR DIVERSIONS, MUST BE IMPLEMENTED TO PREVENT SILT FROM ENTERING WATER RESOURCES THAT RUN THROUGH THE PROPERTY.
4. SILT FENCE IS ONLY ALLOWED TO BE USED TO CONTROL SHEET FLOW RUNOFF FROM LIMITED DRAINAGE AREAS. THE PERMISSIBLE DRAINAGE AREA PER 100 LINEAR FEET OF SILT FENCE IS DEPENDENT ON THE SLOPE BUT IS NO MORE THAN 0.5 ACRE. SILT FENCE CAN NOT BE USED TO CONTROL DRAINAGE AREAS WITH A SLOPE OF GREATER THAN 50%.
5. NO MORE THAN 10 ACRES MAY DRAIN TO A DIVERSION.
6. INLET PROTECTION MUST BE IMPLEMENTED TO PREVENT SEDIMENT FROM ENTERING THE STORM DRAIN SYSTEM, UNLESS THE SYSTEM DISCHARGES TO A SEDIMENT POND.
7. ALL TEMPORARY AND PERMANENT EROSION AND SEDIMENT CONTROL MEASURES WILL BE MAINTAINED AND REPAIRED AS NEEDED TO ASSURE CONTINUED PERFORMANCE OF THEIR INTENDED FUNCTION.

   I.E. STORM INLET PROTECTION
   AS NEEDED. SEDIMENT SHALL BE REMOVED FROM STORM INLET FILTERS AND SHALL BE RESTORED TO ITS ORIGINAL WORKING CONDITION. AT NO TIME SHALL THE SEDIMENT BUILDUP IN FILTERS LIMIT ITS FUNCTION. CHECK AFTER EACH MAJOR RAIN. FOLLOW ADS's MAINTENANCE RECOMMENDATIONS.

   I.E. FILTER STRIPS
   A HEALTHY GROWTH OF VEGETATION CAN BEST BE MAINTAINED BY FERTILIZING, REMOVING SEDIMENT WHEN FILTER BECOMES CLOGGED, AND BY PREVENTING CONSTRUCTION TRAFFIC FROM DRIVING ACROSS FILTER STRIPS.

   I.E. SILT FENCES AND FILTER BARRIERS
   SILT FENCES AND FILTER BARRIERS SHALL BE INSPECTED IMMEDIATELY AFTER EACH RAINFALL AND AT LEAST DAILY DURING PROLONGED RAINFALL. ANY REQUIRED REPAIRS SHALL BE MADE IMMEDIATELY. DO NOT ALLOW STORM WATER TO FLOW UNDER OR AROUND SILT BARRIERS.

   I.E. STRAW BALE BARRIERS
   STRAW BALE BARRIERS SHALL BE INSPECTED IMMEDIATELY AFTER EACH RAINFALL AND AT LEAST DAILY DURING PROLONGED RAINFALL. ANY REQUIRED REPAIRS SHALL BE MADE IMMEDIATELY. DO NOT ALLOW STORM WATER TO FLOW UNDER OR AROUND SILT BARRIERS.

   I.E. ROCK CHECK DAMS
   ROCK CHECK DAMS SHALL BE INSPECTED IMMEDIATELY AFTER EACH RAINFALL AND AT LEAST DAILY DURING PROLONGED RAINFALL. ANY REQUIRED REPAIRS SHALL BE MADE IMMEDIATELY. DO NOT ALLOW STORM WATER TO FLOW UNDER OR AROUND ROCK CHECK DAMS AND/OR SILT FENCE.
8. SILT FENCE SHALL BE CONSTRUCTED BEFORE UPSLOPE LAND DISTURBANCE BEGINS
9. ALL SILT FENCE SHALL BE PLACED AS CLOSE TO THE CONTOUR AS POSSIBLE SO THAT WATER WILL NOT CONCENTRATE AT LOW POINTS IN THE FENCE AND SO THAT SMALL SWALES OR DEPRESSIONS WHICH MAY CARRY SMALL CONCENTRATED FLOWS TO THE SILT FENCE ARE DISSIPATED ALONG ITS LENGTH.
10. TO PREVENT WATER PONDING BY THE SILT FENCE FROM FLOWING AROUND THE ENDS, EACH END SHALL BE CONSTRUCTED UPSLOPE SO THAT THE ENDS ARE AT A HIGHER ELEVATION.
11. WHERE POSSIBLE, SILT FENCE SHALL BE PLACED ON THE FLATTEST AREA AVAILABLE.
12. WHERE POSSIBLE, VEGETATION SHALL BE PRESERVED FOR 5 FT. (OR AS MUCH AS
13. POSSIBLE) UPSLOPE FROM SILT FENCE. IF VEGETATION IS REMOVED, IT SHALL BE RE-ESTABLISHED WITHIN 7 DAYS FROM THE INSTALLATION OF THE SILT FENCE.
14. THE HEIGHT OF THE SILT FENCE SHALL BE A MINIMUM OF 16 IN. ABOVE THE ORIGINAL GROUND SURFACE.
15. THE SILT FENCE SHALL BE PLACED IN A TRENCH CUT A MINIMUM OF 6 IN. DEEP. THE TRENCH SHALL BE CUT WITH A TRENCHER, CABLE LAYING MACHINE, OR OTHER SUITABLE DEVICE WHICH WILL ENSURE AN ADEQUATELY UNIFORM TRENCH DEPTH.
16. THE SILT FENCE SHALL BE PLACED WITH THE STAKES ON THE DOWNSLOPE SIDE OF THE GEOTEXTILE SO THAT 8 IN. OF CLOTH ARE BELOW THE GROUND SURFACE. EXCESS MATERIAL SHALL LAY ON THE BOTTOM OF THE 6-IN.-DEEP TRENCH. THE TRENCH SHALL BE BACKFILLED AND COMPACTED.
17. SEAMS BETWEEN SECTIONS OF SILT FENCE SHALL BE OVERLAPPED WITH THE END STAKES OF EACH SECTION WRAPPED TOGETHER BEFORE DRIVING INTO THE GROUND.
18. MAINTENANCE- SILT FENCE SHALL ALLOW RUNOFF TO PASS ONLY AS DIFFUSE FLOW THROUGH THE GEOTEXTILE. IF RUNOFF OVERTOPS THE SILT FENCE, FLOWS UNDER OR AROUND THE ENDS, OR IN ANY OTHER WAY BECOMES A CONCENTRATED FLOW, ONE OF THE FOLLOWING SHALL BE PERFORMED, AS APPROPRIATE:

J. THE LAYOUT OF SILT FENCE SHALL BE CHANGED,
K. ACCUMULATED SEDIMENT SHALL BE REMOVED, OR
L. OTHER PRACTICES SHALL BE INSTALLED.

19. COMPLY WITH ALL OHIO EPA REQUIREMENTS.
20. INCLUDE SEDIMENT CONTROL MEASURES (SUCH AS DANDY BAGS) ON THE CATCH BASINS SURROUNDING THE AREA.

VEGETATIVE PRACTICES
FILTER STRIP (FS)
A STRIP OR AREA OF VEGETATION (BEING A MIN. OF 18 FEET AND A MAX. OF 100 FEET IN WIDTH) TO REMOVE SEDIMENT AND OTHER POLLUTANTS FROM RUNOFF. THIS PRACTICE APPLIES TO LAND UNDERGOING DEVELOPMENT WHERE FILTER STRIPS ARE NEEDED TO REDUCE SEDIMENT DAMAGE TO ADJACENT PROPERTY. EXISTING GRASS OR GRASS/LEGUME MIXTURES IF WELL ESTABLISHED, SHOULD BE USED AS FILTER STRIPS.

GRASS SELECTION AND ESTABLISHMENT
ALL SEEDING AND MULCHING SHALL CONFORM TO ODOT ITEM 659.09 CLASS 2 UNLESS NOTED OTHERWISE IN SPECIFICATIONS.

REQUIREMENTS FOR CONTROLS OF OTHER WASTES
1. NO SOLID OR LIQUID WASTE, INCLUDING BUILDING MATERIALS OR THEIR PACKAGING, SHALL BE DISCHARGED IN STORM WATER RUNOFF.
2. CONCRETE TRUCKS ARE NOT PERMITTED TO WASH OUT DIRECTLY INTO STORM SEWERS, STREAMS OR DRAINAGE CHANNELS.
3. OFF-SITE TRACKING OF SEDIMENTS BY CONSTRUCTION VEHICLES MUST BE MINIMIZED. WHENEVER CONSTRUCTION VEHICLE ACCESS ROUTES INTERSECT PAVED PUBLIC ROADS, PROVISIONS WILL BE MADE TO MINIMIZE THE TRANSPORT OF SEDIMENT (MUD) BY RUNOFF OR VEHICLE TRACKING ONTO THE PAVED SURFACE. TEMPORARY CONSTRUCTION ROADS WILL FOLLOW THE CONTOUR OF THE NATURAL TERRAIN TO THE EXTENT POSSIBLE. SLOPES SHOULD NOT EXCEED 10 PERCENT. ROADBEDS SHALL BE AT LEAST 14 FEET WIDE FOR ONE-WAY TRAFFIC AND 20 FEET WIDE FOR TWO-WAY TRAFFIC. TEMPORARY PARKING AREAS WILL BE LOCATED ON NATURALLY FLAT AREAS WHENEVER POSSIBLE TO MINIMIZE GRADING. GRADES FOR SAID PARKING AREAS SHOULD BE SUFFICIENT TO PROVIDE DRAINAGE BUT NOT TO EXCEED 4 PERCENT SLOPE. BOTH TEMPORARY AND PERMANENT ROADS AND PARKING AREAS MAY REQUIRE PERIODIC TOP DRESSING WITH NEW GRAVEL. SEEDED AREAS ADJACENT TO ROADS AND PARKING AREAS WILL BE CHECKED PERIODICALLY TO ENSURE THAT A VIGOROUS STAND OF VEGETATION IS MAINTAINED.
4. WASTE DISPOSAL VIA OPEN BURNING IS PROHIBITED.
5. CONTAMINATED SOILS OR SOILS WHERE CONSTRUCTION SITE CHEMICALS HAVE BEEN SPILLED MUST BE REMOVED FROM THE SITE AND DISPOSED OF IN ACCORDANCE WITH FEDERAL, STATE AND LOCAL REGULATIONS.
6. STORM WATER THAT COMES IN CONTACT WITH CONTAMINATED SOILS, OR SOLID & INDUSTRIAL WASTE MUST BE COLLECTED AND DISPOSED OF AS WASTEWATER.
7. FUEL TANKS AND DRUMS OR OTHER CONTAINERS HOLDING CONSTRUCTION SITE CHEMICALS MUST BE STORED WITHIN A DIKED AREA.

MAINTENANCE REQUIREMENTS
1. ALL BMP's MUST BE MAINTAINED IN A FUNCTIONAL CONDITION UNTIL ALL UPSLOPE AREAS THEY CONTROL ARE PERMANENTLY RESTABILIZED.
2. QUALIFIED PERSONNEL (PROVIDED BY THE CONTRACTOR) MUST INSPECT ALL BMP's AT LEAST ONCE EVERY 7 DAYS AND WITHIN 24 HOURS OF A 0.5" OR GREATER RAINFALL WITHIN ANY 24-HOUR PERIOD AND DETERMINE IF THE SWP3 HAS BEEN PROPERLY IMPLEMENTED.
3. WRITTEN REPORTS SUMMARIZING INSPECTION RESULTS MUST BE MADE AVAILABLE UPON REQUEST. REPORTS MUST INCLUDE: DATE OF INSPECTION, NAME AND QUALIFICATIONS OF THE INSPECTOR, WEATHER CONDITIONS, LOCATIONS WHERE IN-STREAM OR OFF-SITE SEDIMENTATION WAS OBSERVED, LOCATIONS OF BMP's NEEDING MAINTENANCE, LOCATIONS OF BMP's FAILING TO OPERATE CORRECTLY OR PROVIDE ADEQUATE PROTECTION, OR LOCATION OF AREAS IN NEED OF ADDITIONAL BMP's NOT IN PLACE AT THE TIME OF INSPECTION.
4. THE REPORTS MUST IDENTIFY INCIDENCES OF NONCOMPLIANCE WITH THE NPDES PERMIT. WHERE A REPORT DOES NOT IDENTIFY INCIDENCES OF NONCOMPLIANCE , THE REPORT MUST CONTAIN A CERTIFICATION THAT THE SITE IS IN COMPLIANCE AT THE TIME OF INSPECTION.
5. MAINTENANCE OR REPAIR OF BMP's MUST BE COMPLETED WITHIN 3 DAYS OF THE DATE OF THE INSPECTION THAT REVEALED THEY WERE DEFICIENT. FOR SEDIMENT PONDS, REPAIR OR MAINTENANCE IS REQUIRED WITHIN 10 DAYS OF THE DATE OF THE INSPECTION.
6. WHEN INSPECTIONS REVEAL THAT A BMP IS NOT EFFECTIVE AND THAT ANOTHER, MORE APPROPRIATE BMP IS REQUIRED, THE SWP3 MUST BE AMENDED AND THE MORE APPROPRIATE BMP MUST BE INSTALLED WITHIN 10 DAYS OF THE INSPECTION THAT REVEALED THE DEFICIENCY.

PERMIT CLOSURE REQUIREMENTS
1. ONCE A SITE REACHES FINAL STABILIZATION AND CONSTRUCTION ACTIVITIES HAVE CEASED, NPDES PERMIT COVERAGE IS TERMINATED BY FILING A NOTICE OF TERMINATION (NOT). THE NOT MUST BE FILED WITHIN 45 DAYS OF REACHING FINAL STABILIZATION.
2. FINAL STABILIZATION IS DEFINED AS ESTABLISHING A VEGETATIVE GROUND COVER OF AT LEAST 70% GROWTH DENSITY, OR OTHER MEANS OF PERMANENT STABILIZATION, OVER THE ENTIRE AREA DISTURBED BY CONSTRUCTION ACTIVITIES.
3. FINAL STABILIZATION ALSO REQUIRES THAT ALL TEMPORARY SEDIMENT AND EROSION CONTROLS BE REMOVED FROM THE PROPERTY AND ALL SEDIMENT THAT WAS TRAPPED BY THOSE CONTROLS TO BE PERMANENTLY STABILIZED TO PREVENT FURTHER EROSION.

SPECIFICATIONS FOR TEMPORARY SEEDING
1. STRUCTURAL EROSION AND SEDIMENT - CONTROL PRACTICE SUCH AS DIVERSIONS AND SEDIMENT TRAPS SHALL BE INSTALLED AND STABILIZED WITH TEMPORARY SEEDING PRIOR TO GRADING THE REST OF THE CONSTRUCTION SITE.
2. TEMPORARY SEEDING SHALL BE APPLIED BETWEEN CONSTRUCTION OPERATIONS ON SOIL THAT WILL NOT BE GRADED OR REWORKED FOR 45 DAYS OR MORE. THESE IDLE AREAS SHOULD BE SEEDED AS SOON AS POSSIBLE AFTER GRADING OR SHALL BE SEEDED WITHIN 7 DAYS. SEVERAL APPLICATIONS OF TEMPORARY SEEDING ARE NECESSARY ON TYPICAL CONSTRUCTION PROJECTS.
3. THE SEEDBED SHOULD BE PULVERIZED AND LOOSE TO ENSURE THE SUCCESS OF ESTABLISHING VEGETATION. HOWEVER, TEMPORARY SEEDING SHALL NOT BE POSTPONED IF IDEAL SEEDED PREPARATION IS NOT POSSIBLE.
4. SOIL AMENDMENTS - APPLICATIONS OF TEMPORARY VEGETATION SHALL ESTABLISH ADEQUATE STANDS OF VEGETATION WHICH MAY REQUIRE THE USE OF SOIL AMENDMENTS. SOIL TESTS SHOULD BE TAKEN ON THE SITE TO PREDICT THE NEED FOR IME AND FERTILIZER.
5. THE TYPE OF SEEDING AND SEEDING RATES SHALL BE AS FOLLOWS:

EROSION CONTROL NOTES:

EROSION AND SEDIMENT CONTROL MEASURES ARE TO BE PLACED PRIOR TO, OR AS THE FIRST STEP IN, CONSTRUCTION. SEDIMENT CONTROL PRACTICES SHALL BE APPLIED AS A PERIMETER DEFENSE AGAINST TRANSPORTING OF SILT OFF SITE. ALL RUNOFF RESULTING FROM CONSTRUCTION OPERATIONS MUST BE FILTERED BY APPROVED METHODS PRIOR TO DISCHARGING TO THE STORM SEWER SYSTEM.

THIS PROJECT IS SUBJECT TO INSPECTION BY THE DEPARTMENT OF WATER PERSONNEL FOR COMPLIANCE WITH THE CITY STORM WATER ORDINANCE DURING AND AFTER DEMOLITION. THIS INCLUDES BUT IS NOT LIMITED TO INSPECTION OF EROSION CONTROL FACILITIES, SURFACE DRAINAGE, AND DETENTION/RETENTION FACILITIES. ADDITIONAL MEASURES MAY BE REQUIRED IF VIOLATIONS OF THE ORDINANCE OCCUR AND WATER DEPARTMENT PERSONNEL DEEM IT NECESSARY. ALL MEASURES SHALL COMPLY WITH LOCAL GOVERNMENTAL STANDARDS AND "RAINWATER AND LAND DEVELOPMENT, OHIO'S PROTECTION" (LATEST EDITION)

Permanent Seeding

Seed Mix	Seeding Rates lbs./ac.	lbs./1,000 ft²	Notes:
General Use			
Creeping Red Fescue Domestic Ryegrass Kentucky Bluegrass	20–40 10–20 10–20	1/2–1 1/4–1/2 1/4–1/2	
Tall Fescue	40	1	
Dwarf Fescue	40	1	
Steep Banks or Cut Slopes			
Tall Fescue	40	1	
Crown Vetch Tall Fescue	10 20	1/4 1/2	Do not seed later than August.
Flat Pea Tall Fescue	20 20	1/2 1/2	Do not seed later than August.
Road Ditches and Swales			
Tall Fescue	40	1	
Dwarf Fescue Kentucky Bluegrass	90 5	2 1/4 	
Lawns			
Kentucky Bluegrass Perennial Ryegrass	60 60	1 1/4 1 1/2	
Kentucky Bluegrass Creeping Red Fescue	60 60	1 1/4 1 1/2	For shaded areas.

Note: Other approved seed species may be substituted.

Temporary Seeding Species Selection

Seeding Dates	Species	Per 1,000 ft²	Per Acre
March 1 to August 15	Oats Tall Fescue Annual Ryegrass	3 lb. 1 lb. 1 lb.	4 bu 40 lb. 40 lb.
	Perennial Ryegrass Tall Fescue Annual Ryegrass	1 lb. 1 lb. 1 lb.	40 lb. 40 lb. 40 lb.
August 16 to November 1	Rye Tall Fescue Annal Ryegrass	3 lb. 1 lb. 1 lb.	2 bu 40 lb. 40 lb.
	Wheat Tall Fescue Annal Ryegrass	3 lb. 1 lb. 1 lb.	2 bu 40 lb. 40 lb.
	Perennial Ryegrass Tall Fescue Annual Ryegrass	1 lb. 1 lb. 1 lb.	40 lb. 40 lb. 40 lb.
November 1 to spring seeding	Use mulch only, sodding practices or Dormant Seeding.		

Note: Other approved seed species may be substituted.

NOTE:
CONTRACTOR TO TAKE CARE TO SAVE TREES WHERE EVER POSSIBLE.

PLAN NORTH

NORTH

2 WORKING DAYS BEFORE YOU DIG
CALL TOLL FREE 800-362-2764
OHIO UTILITIES PROTECTION SERVICE

BRUMBAUGH ENGINEERING & SURVEYING, LLC
2270 SOUTH MIAMI STREET
WEST MILTON, OHIO 45383
PHONE: (937) 698-3000
FAX: (937) 698-3928
EMAIL: John@bes-engineer.com

STATE OF OHIO
STEVEN R. FOX
E-82926
REGISTERED PROFESSIONAL ENGINEER

REGISTERED ENGINEER OF OHIO
NO: 82926
STEVEN R. FOX 10/19/2021

PROJECT NO.:	452.21
DATE:	10/19/2021
DRAWN BY:	SRF
DESIGNED BY:	SRF
CHECKED BY:	JJB
REVISED	
1.	
2.	
3.	
4.	
5.	
6.	
7.	

SWPPP
FOR
REMINGTON SEED
LOCATED AT
5585 OH-571, GREENVILLE, OH 45331

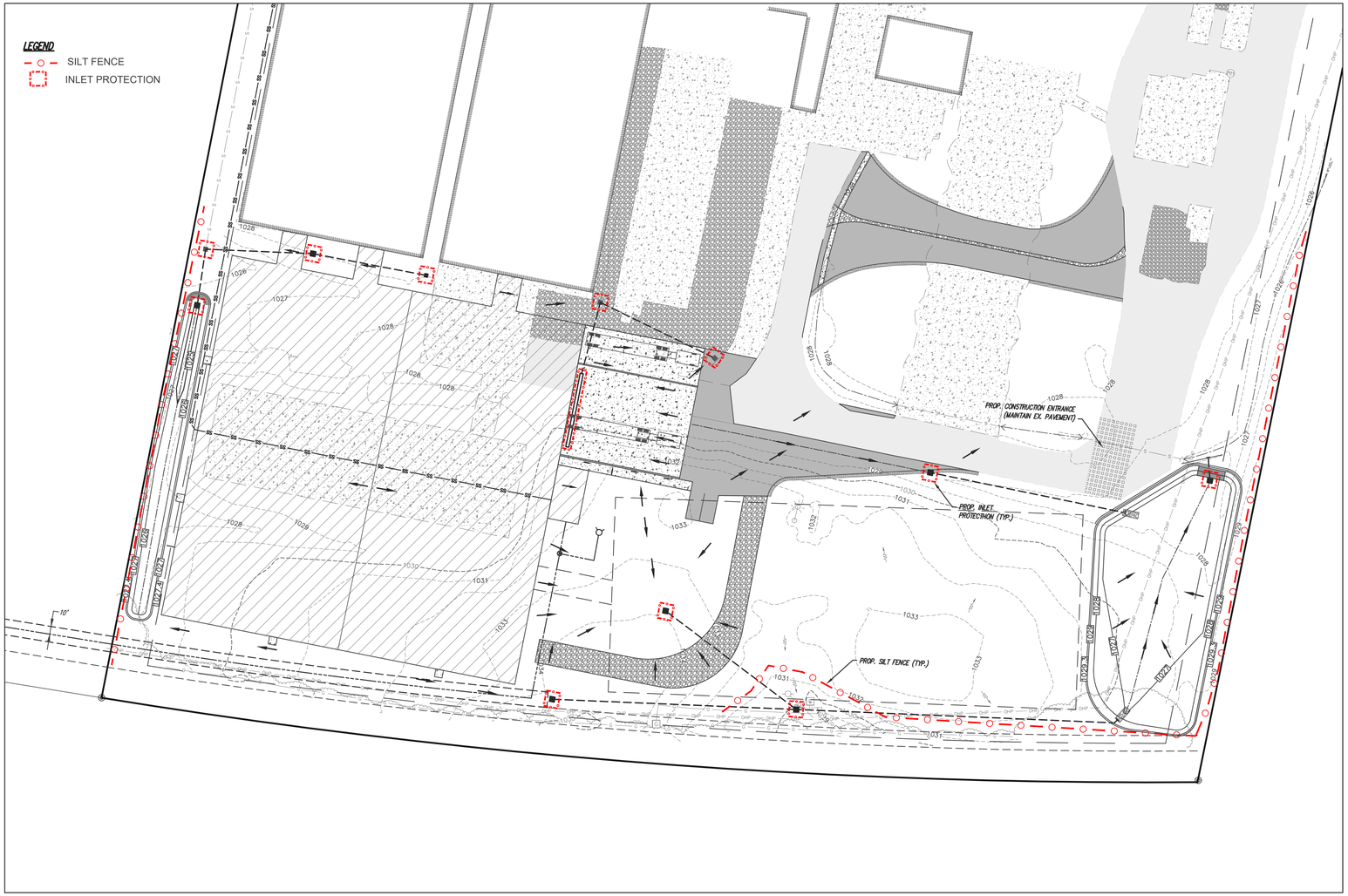

GENERAL NOTES

THE CONTRACTOR SHALL INSTALL A GRAVEL WASH-OUT AREA AT THE SITE ENTRANCE / EXIT IMMEDIATELY UPON COMMENCEMENT OF THE PROJECT. THE GRAVEL WASH-OUT AREA SHALL FACILITATE THE REMOVAL OF SEDIMENTS AND DEBRIS FROM TRUCKS AND OTHER VEHICLES LEAVING THE PROJECT SITE TO PREVENT SEDIMENTS FROM ENTERING THE RIGHT OF WAY. THE GRAVEL WASH-OUT AREA SHALL BE A MINIMUM OF 20' WIDE BY 60' LONG . GRAVEL SHALL BE A MINIMUM OF 18" DEEP AND SHALL BE No.2. THE SIZE, SHAPE AND ORIENTATION OF THE GRAVEL DRIVE SHALL BE DETERMINED BY THE CONTRACTOR AND APPROVED BY THE OWNER. THE DRIVE SHALL BE POSITIONED TO FACILITATE EQUIPMENT ACCESS AND CLEANING.

INSTALL A TEMPORARY SILT BASIN ADJACENT TO GRAVEL DRIVE TO RECEIVE RUNOFF FROM TRUCK WASHING ACTIVITIES. THE TEMPORARY BASIN SHALL BE MAINTAINED BY THE CONTRACTOR AND CLEARED OF DEBRIS AS REQUIRED. INSTALL A SILT FENCE AROUND BASIN AS INDICATED. INFILL BASIN AT THE CONCLUSION OF THE PROJECT TO FINAL GRADE AND SEED.

SEDIMENT BASIN/DETENTION BASIN NOTE:

THE PROPOSED BASINS ARE TO BE UTILIZED AS SEDIMENT BASIN DURING THE CONSTRUCTION OF THE SITE PER DETAIL ON SHEET C7. ONCE THE SITE IS STABILIZED AND SEEDING IS ESTABLISHED, SEDIMENT BASIN IS TO BE CONVERTED TO DETENTION BASINS PER SHEET C3.

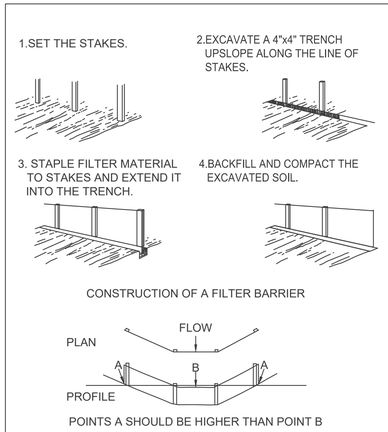

SILT FABRIC FENCE DETAIL

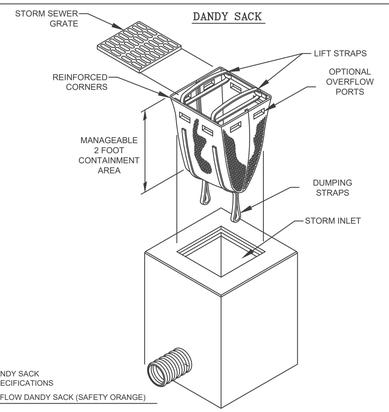

MECHANICAL PROPERTIES	TEST METHOD	UNITS	MARV
Grab Tensile Strength	ASTM D 4632	kN (lbs)	1.62 (365) X 0.89 (200)
Grab Tensile Elongation	ASTM D 4632	%	24 X 10
Puncture Strength	ASTM D 4833	kN (lbs)	0.40 (90)
Mullen Burst Strength	ASTM D 3786	kPa (psi)	3097 (450)
Trapezoid Tear Strength	ASTM D 4533	kN (lbs)	0.51 (115) X 0.33 (75)
UV Resistence	ASTM D 4355	%	90
Apparent Opening Size	ASTM D 4751	Mm (US Std Sieve)	0.425 (40)
Flow Rate	ASTM D 4491	l/min/m²(gal/min/ft²)	5907 (145)
Permittivity	ASTM D 4491	Sec $^{-1}$	2.1

INLET SEDIMENT CONTROL DEVICE DETAIL

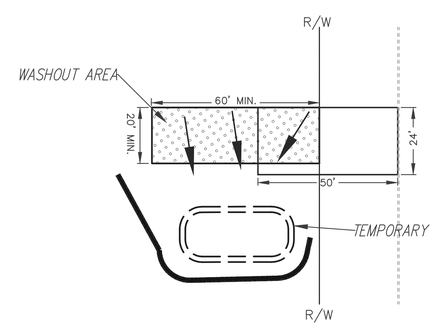

CONSTRUCTION WASHOUT AREA DETAIL

PLAN NORTH

NORTH

2 WORKING DAYS BEFORE YOU DIG
CALL TOLL FREE 800-362-2764
OHIO UTILITIES PROTECTION SERVICE

HORIZONTAL SCALE 1"=40'
0' 40' 80' 120'

BRUMBAUGH ENGINEERING & SURVEYING, LLC
2270 SOUTH MIAMI STREET
WEST MILTON, OHIO 45383
PHONE: (937) 698-3000
FAX: (937) 698-3928
EMAIL: John@bes-engineer.com

STATE OF OHIO
STEVEN R. FOX
E-82926
REGISTERED PROFESSIONAL ENGINEER

REGISTERED ENGINEER OF OHIO
NO: 82926
STEVEN R. FOX 10/19/2021

PROJECT NO.:	452.21
DATE:	10/19/2021
DRAWN BY:	SRF
DESIGNED BY:	SRF
CHECKED BY:	JJB

REVISED
1. (12.8.21)REVISED WATER VALVE LOCATION
2.
3.
4.
5.
6.
7.

SWPPP
FOR
REMINGTON SEED
LOCATED AT
5585 OH-571, GREENVILLE, OH 45331

SHEET C6
OF 7

SEDIMENT BASIN SUMMARY

WEST POND – DRAINAGE AREA = 0.76 ACRES
TOTAL VOLUME PROVIDED = 3,110 CU FT (REQUIRED 2128 CU FT)
SEDIMENT STORAGE ZONE = 1024.50 TO 1025.75
=> VOLUME PROVIDED = 1,103 CU FT (REQUIRED 760 CU FT)
DEWATERING ZONE = 1025.75 TO 1026.50
=> VOLUME PROVIDED = 2,007 CU FT (REQUIRED 1,368 CU FT)

DEPTH (FT)	DEWATERING VOL. (CU FT)	ORIFICE SIZE (IN)	DRAIN TIME (DAYS)
0–0.75'	2007	3/4"	2.58

EAST POND – DRAINAGE AREA = 2.01 ACRES
TOTAL VOLUME PROVIDED = 6,107 CU FT (REQUIRED 5,628 CU FT)
SEDIMENT STORAGE ZONE = 1026.20 TO 1027.00
=> VOLUME PROVIDED = 2,297 CU FT (REQUIRED 2,010 CU FT)
DEWATERING ZONE = 1027.00 TO 1027.40
=> VOLUME PROVIDED = 3,810 CU FT (REQUIRED 3,618 CU FT)

DEPTH (FT)	DEWATERING VOL. (CU FT)	ORIFICE SIZE (IN)	DRAIN TIME (DAYS)
0–0.4'	3810	3/4"	4.90

NOTE:
THE SEDIMENT STORAGE ZONE OF THE POND ARE TO BE CLEANED OUT WHEN THE SILT OCCUPIES 40% OF THE SEDIMENT STORAGE ZONE. WHICH EQUALS
WEST POND = 1025.32'
EAST POND = 1026.76'

SPECIFICATIONS FOR SEDIMENT BASINS

1. SEDIMENT BASINS SHALL BE CONSTRUCTED AND OPERATIONAL BEFORE UPSLOPE LAND DISTURBANCE BEGINS.
2. SITE PREPARATION – THE AREA UNDER THE EMBANKMENT SHALL BE CLEARED, GRUBBED, AND STRIPPED OF ANY VEGETATION AND ROOT MAT. THE POOL AREA SHALL BE CLEARED AS NEEDED TO FACILITATE SEDIMENT CLEANOUT. GULLIES AND SHARP BREAKS SHALL BE SLOPED TO NO STEEPER THAN 1:1. THE SURFACE OF THE FOUNDATION ARE WILL BE THOROUGHLY SCARIFIED BEFORE PLACEMENT OF THE EMBANKMENT MATERIAL.
3. CUT–OFF TRENCH – THE CUTOFF TRENCH SHALL BE EXCAVATED ALONG THE CENTERLINE OF THE EMBANKMENT. THE MINIMUM DEPTH SHALL BE 3 FT. UNLESS SPECIFIED DEEPER ON THE PLANS OR AS A RESULT OF SITE CONDITIONS. THE MINIMUM BOTTOM WIDTH SHALL BE 4 FT., BUT WIDE ENOUGH TO PERMIT OPERATION OF COMPACTION EQUIPMENT. THE TRENCH SHALL BE KEPT FREE OF STANDING WATER DURING BACKFILL OPERATIONS.
4. EMBANKMENT – THE FILL MATERIAL SHALL BE FREE OF ALL SOD, ROOTS, FROZEN SOIL, STONES OVER 6 IN. IN DIAMETER, AND OTHER OBJECTIONABLE MATERIAL. THE PLACING AND SPREADING OF THE FILL MATERIAL SHALL BE STARTED AT THE LOWEST POINT OF THE FOUNDATION AND THE FILL SHALL BE BROUGHT UP IN APPROXIMATELY 6 IN. HORIZONTAL LAYERS OR OF SUCH THICKNESS THAT THE REQUIRED COMPACTION CAN BE OBTAINED WITH THE EQUIPMENT USED. CONSTRUCTION EQUIPMENT SHALL BE OPERATED OVER EACH LAYER IN A WAY THAT WILL RESULT IN THE REQUIRED COMPACTION. SPECIAL EQUIPMENT SHALL BE USED WHEN THE REQUIRED COMPACTION CANNOT BE OBTAINED WITHOUT IT. THE MOISTURE CONTENT OF FILL MATERIAL SHALL BE SUCH THAT THE REQUIRED DEGREE OF COMPACTION CAN BE OBTAINED WITH THE EQUIPMENT USED.
5. PIPE SPILLWAY – THE PIPE CONDUIT BARREL SHALL BE PLACED ON A FIRM FOUNDATION TO THE LINES AND GRADES SHOWN ON THE PLANS. CONNECTIONS BETWEEN THE RISER AND BARREL, THE ANTI–SEEP COLLARS AND BARREL AND ALL PIPE JOINTS SHALL BE WATER–TIGHT. SELECTED BACKFILL MATERIAL SHALL BE PLACED AROUND THE CONDUIT IN LAYERS AND EACH LAYER SHALL BE COMPACTED TO AT LEAST THE SAME DENSITY AS THE ADJACENT EMBANKMENT. ALL COMPACTION WITHIN 2 FT. OF THE PIPE SPILLWAY WILL BE ACCOMPLISHED WITH HAND–OPERATED TAMPING EQUIPMENT.
6. RISER PIPE BASE – THE RISER PIPE SHALL BE SET A MINIMUM OF 6 IN. IN THE CONCRETE BASE.
7. TRASH RACKS – THE TOP OF THE RISER SHALL BE FITTED WITH TRASH RACKS FIRMLY FASTENED TO THE RISER PIPE.
8. EMERGENCY SPILLWAY – THE EMERGENCY SPILLWAY SHALL BE CUT IN UNDISTURBED GROUND. ACCURATE CONSTRUCTION OF THE SPILLWAY ELEVATION AND WIDTH IS CRITICAL AND SHALL BE WITHIN A TOLERANCE OF 0.2 FT.
9. SEEN AND MULCH – THE SEDIMENT BASIN SHALL BE STABILIZED IMMEDIATELY FOLLOWING ITS CONSTRUCTION. IN NO CASE SHALL THE EMBANKMENT OR EMERGENCY SPILLWAY REMAIN BARE FOR MORE THAN 7 DAYS.
10. SEDIMENT CLEANOUT – SEDIMENT SHALL BE REMOVED AND THE SEDIMENT BASIN RESTORED TO ITS ORIGINAL DIMENSIONS WHEN THE SEDIMENT HAS FILED ONE–HALF THE POND'S ORIGINAL DEPTH OR AS INDICATED ON THE PLANS. SEDIMENT REMOVED FROM THE BASIN SHALL BE PLACED SO THAT IT WILL NOT ERODE.
11. FINAL REMOVAL – SEDIMENT BASINS SHALL BE REMOVED AFTER THE UPSTREAM DRAINAGE AREA IS STABILIZED OR AS INDICATED IN THE PLANS. DEWATERING AND REMOVAL SHALL NOT CAUSE SEDIMENT TO BE DISCHARGED, THE SEDIMENT BASIN SITE AND SEDIMENT REMOVED FROM THE BASIN SHALL BE STABILIZED.

CONSTRUCTION OF DETENTION BASIN FROM SEDIMENT BASIN

AFTER THE PAVEMENT AREAS ARE INSTALLED, AND ALL SEEDING & LANDSCAPING HAVE BEEN COMPLETED AND ARE GROWING ADEQUATELY TO STOP ALL EROSION AS DIRECTED BY THE ENGINEER, THE DETENTION BASIN SHALL BE CONSTRUCTED AS DIRECTED BELOW.

1. REMOVE EXISTING LAYER OF SEDIMENT FROM SEDIMENTATION BASIN OPERATIONS.
2. REMODEL SEDIMENTATION CONTROL STRUCTURES BY REMOVING 8" STORM PIPE, RISER AND RIP RAP WHERE REQUIRED AND RE–CONSTRUCTING THE OUTLET STRUCTURE AS SHOWN PER PLANS.
3. PLACE TYPES OF ROCK CHANNEL PROTECTION AS SHOWN PER PLANS & DETAILS. RE–GRADE & TOUCH UP BERM TO FINAL GRADES AND SEED THE REMAINING AREAS OF THE BASIN & SLOPES.

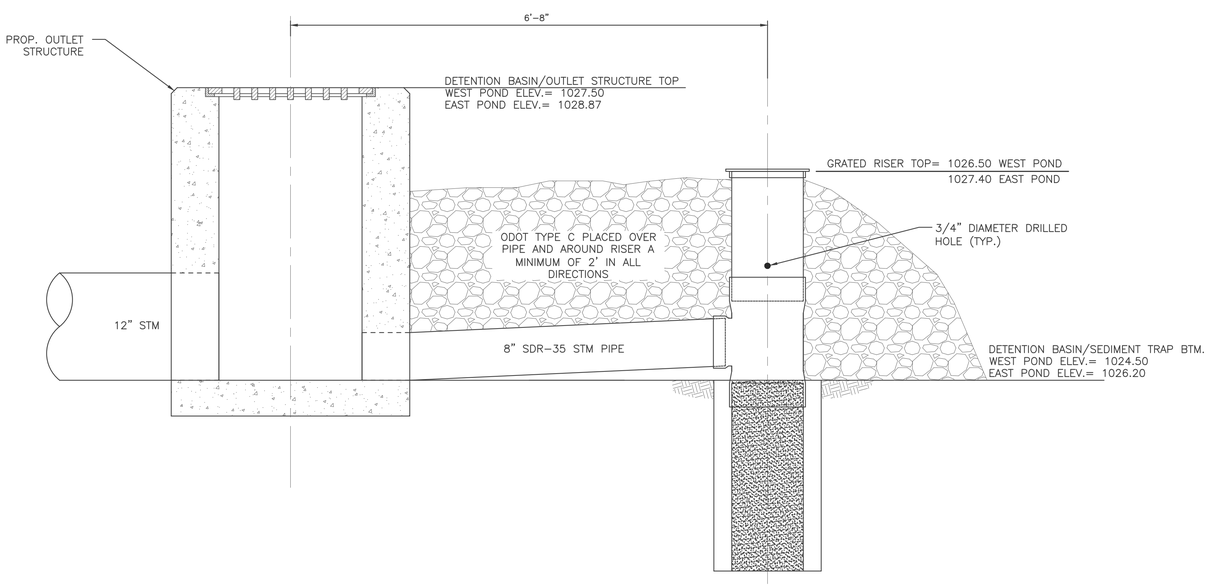

TYPICAL RISER TO OUTLET STRUCTURE DETAIL
(N.T.S.)

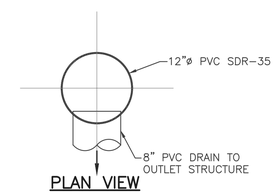

PLAN VIEW

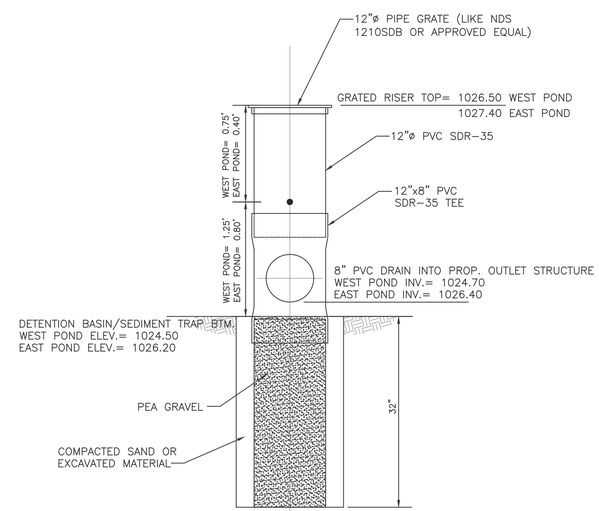

RISER DETAIL
(N.T.S.)

CALL TOLL FREE 800–362–2764 BEFORE YOU DIG
2 WORKING DAYS
OHIO UTILITIES PROTECTION SERVICE

BRUMBAUGH ENGINEERING & SURVEYING, LLC
2270 SOUTH MIAMI STREET
WEST MILTON, OHIO 45383
PHONE: (937) 698–3000
FAX: (937) 698–3928
EMAIL: John@bes–engineer.com

STATE OF OHIO
STEVEN R. FOX
E–82926
REGISTERED PROFESSIONAL ENGINEER

REGISTERED ENGINEER OF OHIO
NO: 82926
STEVEN R. FOX 10/19/2021

PROJECT NO.:	452.21
DATE:	10/19/2021
DRAWN BY:	SRF
DESIGNED BY:	SRF
CHECKED BY:	JJB
REVISED	
1.	
2.	
3.	
4.	
5.	
6.	
7.	

SWPPP
FOR
REMINGTON SEED
LOCATED AT
5585 OH–571, GREENVILLE, OH 45331

SHEET C7
OF 7

ABBREVIATIONS

SYMBOL	
@	AT
&	AND
∠	ANGLE
Ø	DIAMETER
℄	CENTER LINE
℄	PLATE

A	
ABV	ABOVE
A/C	AIR CONDITIONING
AFF	ABOVE FINISHED FLOOR
AHU	AIR HANDLER UNIT
AL	ALUMINUM
ALT	ALTERNATE
ANOD	ANODIZED
ANCH	ANCHOR
APPROX	APPROXIMATELY
ARCH	ARCHITECT OR ARCHITECTURAL
ATTEN	ATTENUATED
AUTO	AUTOMATIC
AVG	AVERAGE

B	
BLDG	BUILDING
BLK	BLOCK
BLKG	BLOCKING
BOT	BOTTOM
BRG	BEARING
BSMT	BASEMENT

C	
CAB	CABINET
CB	CATCH BASIN
C/C	CENTER TO CENTER
CF	CUBIC FOOT
CFCI	CONTRACTOR FURNISH, CONTRACTOR INSTALL
CFOI	CONTRACTOR FURNISH, OWNER INSTALL
CG	CORNER GUARD
CJ	CONTROL JOINT
CLG	CEILING
CL	CLOSET
CLR	CLEAR
CMU	CONCRETE MASONRY UNIT
CO	CLEAN OUT
COL	COLUMN
CONC	CONCRETE
CONST	CONSTRUCTION
CONT	CONTINUOUS OR CONTINUE
CPU	CENTRAL PROCESSING UNIT (COMPUTER)
CY	CUBIC YARD

D	
DBL	DOUBLE
DEMO	DEMOLISH, DEMOLITION
DF	DRINKING FOUNTAIN
DIA	DIAMETER
DIM	DIMENSION
DISP	DISPENSER
DIV	DIVISION
DS	DOWNSPOUT
DWG	DRAWING
DTL	DETAIL

E	
EA	EACH
EC	ELECTRICAL CONTRACTOR
EIFS	EXTERIOR INSULATION AND FINISH SYSTEM
EJ	EXPANSION JOINT
ELEC	ELECTRIC OR ELECTRICAL
ELEV	ELEVATION OR ELEVATOR
EMERG	EMERGENCY
EQ	EQUAL
EQUIP	EQUIPMENT
EWC	ELECTRIC WATER COOLER
EXIST OR EX	EXISTING
EXP	EXPANSION
EXT	EXTERIOR

F	
FD	FLOOR DRAIN
FE	FIRE EXTINGUISHER
FEC	FIRE EXTINGUISHER CABINET
FF	FINISH FLOOR
FIN	FINISH OR FINISHED
FLR	FLOOR
FND	FOUNDATION
FRT	FIRE RETARDANT TREATED WOOD
FT	FOOT OR FEET OR FULLY TEMPERED
FTG	FOOTING
FUR	FURRING
FV	FIELD VERIFY
FOW	FACE OF WALL

G	
GA	GAUGE
GALV	GALVANIZED
GC	GENERAL CONTRACTOR
GD	GRADE OR GRADING
GEN	GENERAL
GL	GLASS OR GLAZING
GND	GROUND
GYP	GYPSUM
GWB	GYPSUM BOARD
GWT	GLAZED WALL TILE

H	
HB	HOSE BIBB
HDW	HARDWARE
HM	HOLLOW METAL
HORIZ	HORIZONTAL
HT	HEIGHT
HVAC	HEATING, VENTILATION & AIR CONDITIONING
HWD	HARDWARE

I	
ID	INSIDE DIAMETER
IN	INCH
INCL	INCLUDE (D) (ING)
INT	INTERIOR
INV	INVERT

J	
JB	JUNCTION BOX
JC	JANITOR CLOSET

L	
L	LONG
LAV	LAVATORY
LBS	POUNDS
LH	LEFT HAND
LL	LIVE LOAD
LLH	LONG LEG HORIZONTAL
LLV	LONG LEG VERTICAL
LTL	LINTEL
LVR	LOUVER

M	
M	MEN OR METER
MAS	MASONRY
MAT	MATERIAL
MAX	MAXIMUM
MC	MECHANICAL CONTRACTOR
MECH	MECHANICAL
MFR	MANUFACTURER
MH	MOUNTING HEIGHT, MANHOLE
MIL	THOUSANDTHS OF AN INCH
MM	MILLIMETER
MIN	MINIMUM
MISC	MISCELLANEOUS
MO	MASONRY OPENING
MTD	MOUNTED
MTL	METAL

N	
N	NORTH OR NITROGEN
NC	NURSE CALL
NIC	NOT IN CONTRACT
NO	NUMBER OR NITROUS OXIDE
NOM	NOMINAL
NRC	NOISE REDUCTION COEFFICIENT
NTS	NOT TO SCALE

O	
OD	OUTSIDE DIAMETER
OFCI	OWNER FURNISH, CONTRACTOR INSTALL
OFOI	OWNER FURNISH, OWNER INSTALL
OFVI	OWNER FURNISH, VENDOR INSTALL
OH	OVERHEAD
OHD	OVERHEAD DOOR
OPNG	OPENING
OPP	OPPOSITE
O_2	OXYGEN

P	
PAR	PARALLEL
PC	PLUMBING CONTRACTOR
PCF	POUNDS PER CUBIC FOOT
PL	PLATE OR PROPERTY LINE
PLBG	PLUMBING
PLWD	PLYWOOD
PME	PLUMBING, MECHANICAL & ELECTRICAL
PNL	PANEL
PR	PAIR
PSF	POUNDS PER SQUARE FOOT
PSI	POUNDS PER SQUARE INCH
PVC	POLYVINYL CHLORIDE

Q	
QTY	QUANTITY

R	
R	RADIUS
RA	RETURN AIR
RB	RUBBER BASE
RD	ROOF DRAIN
RECEPT	RECEPTACLE
REF	REFERENCE
REINF	REINFORCE
REQD	REQUIRED
RET	RETURN
REV	REVISION
RH	RIGHT HAND
RM	ROOM
RO	ROUGH OPENING
ROW	RIGHT OF WAY

S	
S	SOUTH
SAN	SANITARY
SB	SINK BASE
SCHED	SCHEDULE
SEAL	SEALANT
SECT	SECTION
SF	SQUARE FEET
SG	SAFETY GLASS
SH	SPRINKLER HEAD OR SHOWER HEAD
SHT	SHEET
SHTG	SHEATHING
SIM	SIMILAR
SPEC	SPECIFICATION(S)
SPK	SPEAKER
SQ	SQUARE
ST	STREET
STC	SOUND TRANSMISSION CLASSIFICATION
STD	STANDARD
STL	STEEL
STR	STRUCTURAL
SUSP	SUSPENDED
SV	SHEET VINYL
SYS	SYSTEM

T	
T & G	TONGUE & GROOVE
TB	TOWEL BAR
T&B	TOP AND BOTTOM
TEL	TELEPHONE
TOC	TOP OF CONCRETE
TOS	TOP OF STEEL
TOM	TOP OF MASONRY
TOW	TOP OF WALL
TRANS	TRANSFORMER
TV	TELEVISION
TYP	TYPICAL

U	
UC	UNDER CABINET OR COUNTER
UH	UNIT HEATER
UL	UNDERWRITERS LABORATORY
UNO	UNLESS NOTED OTHERWISE

V	
V	VACUUM
VB	VAPOR BARRIER
VCT	VINYL COMPOSITION TILE
VERT	VERTICAL
VS	VACUUM SLIDE

W	
W	WIDE OR WEST OR WOMEN
W/	WITH
W/O	WITHOUT
WC	WATER CLOSET OR WALL CABINET
WD	WOOD
WIN	WINDOW
WP	WORK POINT
WPT	WOOD PRESERVATIVE TREATMENT
WT	WEIGHT
WWF	WELDED WIRE FABRIC

REFERENCE SYMBOLS

DRAWING TITLE

A1 FIRST FLOOR PLAN
1/4" = 1' - 0"
- DRAWING TITLE
- SCALE OF DRAWING
- DRAWING REFERENCE NUMBER

INTERIOR ELEVATIONS

1 / 4 A1.1 2 / 3
- DRAWING REFERENCE NUMBER
- DRAWING SHEET NUMBER

BUILDING/DETAIL SECTION

B1 / A1.1
- DRAWING REFERENCE NUMBER
- DRAWING SHEET NUMBER

ENLARGED DETAIL

B1 / A1.1
- DRAWING REFERENCE NUMBER
- DRAWING SHEET NUMBER

EXTERIOR ELEVATIONS

1 / 4 A1.1 2 / 3
- DRAWING REFERENCE NUMBER
- DRAWING SHEET NUMBER

MATCH LINE

A1 / A1.1
- DRAWING REFERENCE NUMBER
- DRAWING SHEET NUMBER

MATERIAL SYMBOLS IN SECTION

- EARTH
- GRANULAR FILL
- CONCRETE
- CMU BLOCK
- BLOCKING / SHIM
- LOOSE OR BATT INSULATION
- RIGID INSULATION
- STEEL
- PLYWOOD
- BRICK
- SOLID SURFACE
- GYPSUM / PLASTER
- WOOD, FINISHED
- WOOD, DIMENSIONAL

DRAWING SYMBOLS

COLUMN CENTER LINES

A / 1

ROOM SYMBOL

ROOM NAME / 101
- ROOM NAME
- ROOM NUMBER

PLAN SYMBOLS

- 00 — CONSTRUCTION NOTES
- 00 — DEMOLITION NOTES
- 00 — ACCESSORIES (LETTERS)
- 101 — DOOR NUMBER SYMBOL
- 101 — WINDOW SYMBOL
- A1 — WALL TYPE
- 00 — REVISION / CHANGE
- CG — CORNER GUARD
- EWP — END WALL PROTECTOR
- FEC — FIRE EXTINGUISHER CABINET
- TRUE NORTH
- PROJECT NORTH

ELEVATION SYMBOLS

- CHANGE IN ELEVATION
- ELEVATION

TYPICAL WALL CONVENTIONS

- EXISTING CONSTRUCTION TO BE REMOVED
- EXISTING CONSTRUCTION TO REMAIN
- NEW CONSTRUCTION (NEW BUILDING OR ADDITION)

REFLECTED CEILING SYMBOLS

- SURFACE MOUNTED LIGHT FIXTURES
- RECESSED LIGHT FIXTURES
- CALL LIGHT
- EXIT LIGHT
- SUPPLY DIFFUSER
- RETURN
- S — SMOKE DETECTOR
- S — SPEAKER
- SPRINKLER HEAD
- CURTAIN OR IV TRACK
- 9' - 6" — CEILING HEIGHT

INTERIOR ELEVATION SYMBOLS

- DUPLEX RECEPTACLE
- TELE/DATA OUTLET
- L — LIGHT SWITCH
- DUPLEX RECEPTACLE (EMERGENCY POWER)
- N C — NURSE CALL BUTTON
- C B — CODE BLUE BUTTON
- MEDICAL GAS OUTLET
- T — TEMPERED GLASS
- S — SPANDREL GLASS

FIRE BARRIER LEGEND

- SMOKE RESISTIVE
- 1 — 1 HR. FIRE BARRIER
- 1S — 1 HR. FIRE/SMOKE BARRIER
- 2 — 2 HR. FIRE BARRIER
- 2S — 2 HR. FIRE/SMOKE BARRIER
- 3 — 3 HR. FIRE BARRIER

ALL SYMBOLS OR ABBREVIATIONS MIGHT NOT NECESSARILY BE USED ON THIS PROJECT.
ADDITIONAL SYMBOLS OR ABBREVIATIONS MAY APPEAR ON SUBSEQUENT SHEETS.

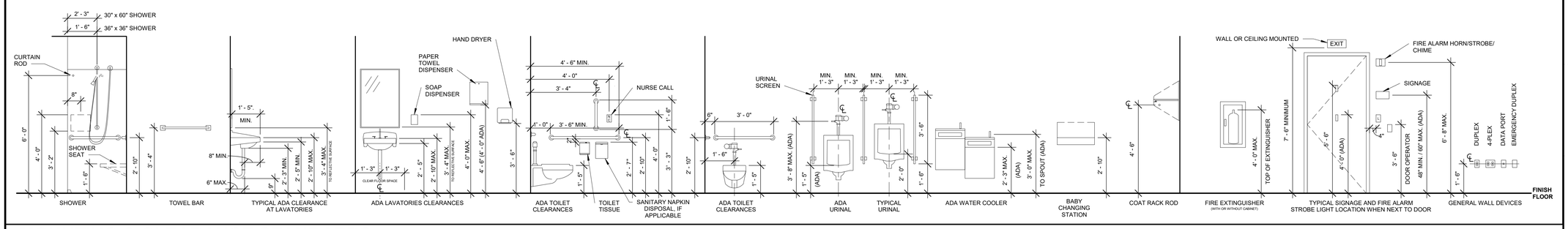

MOUNTING & CLEARANCE STANDARDS N.T.S.

(FOLLOW THESE UNLESS NOTED OTHERWISE)

App Architecture
creative focused design
615 Woodside Drive, Englewood, Ohio 45322
T 937.836.8898 F 937.832.3696
www.app-arch.com

Facility Expansion
Remington Seeds
5585 SR 571 E, Greenville, OH 45331

ISSUE

NO.	DATE	DESCRIPTION
	08/06/21	BID SET

DATE	08/06/21
JOB NO.	3929.00
DRAWN	DRM / AJB
CHECKED	TJB

COPYRIGHT © 2021 - App Architecture, Inc.

TITLE
ABBREVIATIONS AND SYMBOLS

SHEET NO.
A0.1

8/6/2021 3:32:01 PM

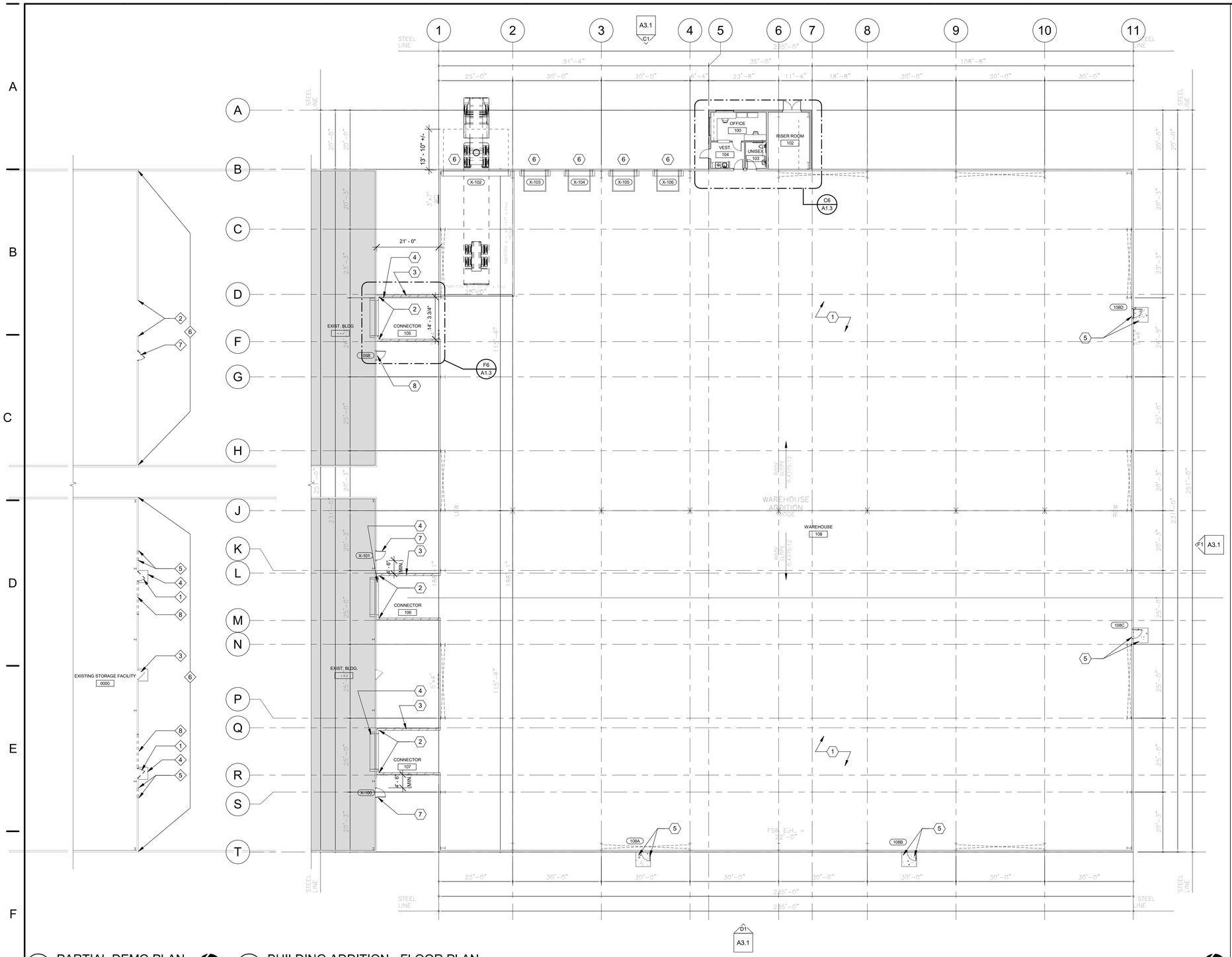

F1 PARTIAL DEMO PLAN
1/16" = 1'-0"

F2 BUILDING ADDITION - FLOOR PLAN
1/16" = 1'-0"

DEMOLITION NOTES

⟨00⟩ INDICATES DEMOLITION NOTE.

1. REMOVE AND RETAIN DOOR ASSEMBLY: DOOR FRAME, HARDWARE AND DOOR.
2. REMOVE EXISTING EXTERIOR OVERHEAD DOOR.
3. EXISTING DOOR ASSEMBLY TO REMAIN.
4. COORDINATE REMOVAL OF EXTERIOR PAD WITH GENERAL CONTRACTOR IN FIELD.
5. SAW-CUT EXTERIOR PANELING IN PREPARATION FOR REINSTALLATION OF DOOR. COORDINATE FINAL LOCATION IN FIELD WITH GENERAL CONTRACTOR.
6. EXISTING PRE-ENGINEERED BUILDING TO REMAIN.
7. REMOVE AND DISPOSE OF EXISTING DOOR ASSEMBLY.
8. REMOVE PORTION OF EXISTING EXTERIOR METAL PANEL. COORDINATE RELOCATION OF INTERIOR FRAMING WITH GENERAL CONTRACTOR AND FIELD CONDITIONS.

CONSTRUCTION NOTES

⟨00⟩ INDICATES CONSTRUCTION NOTE.

1. PRE-ENGINEERED METAL BUILDING STRUCTURE AND EXTERIOR WALL PANEL ASSEMBLY. REFER TO PRE-ENGINEERED METAL BUILDING DRAWINGS FOR INFORMATION (TYP.)
2. 3-HOUR UL-LISTED FIREWALL. FIREWALL BASIS OF DESIGN: UL DESIGN NO. U904.
3. 8" CONCRETE MASONRY UNIT CONNECTOR.
4. 3-HOUR RATED, UL-LISTED OVERHEAD DOOR. BASIS OF DESIGN: OVERHEAD DOOR COMPANY, FIREKING MODEL 630.
5. HOLLOW-METAL DOOR ASSEMBLY. PROVIDE EXTERIOR CONCRETE FROST-PROOF LANDING PAD AT EXTERIOR. MAINTAIN POSITIVE SLOPE AWAY FROM BUILDING.
6. RELOCATED OVERHEAD DOOR. COORDINATE REMOVAL AND RELOCATION/ INSTALLATION WITH GENERAL CONTRACTOR.
7. REINSTALL EXISTING DOOR ASSEMBLY. INSTALLATION SHALL BE, MINIMUM, 4'-0" AWAY FROM NEW 3-HOUR RATED FIREWALL CONSTRUCTION.
8. 45-MINUTE, UL-RATED HOLLOW-METAL DOOR AND FRAME ASSEMBLY.

GENERAL NOTES

A. OVERALL DIMENSIONS PROVIDED BY AMERICAN BUILDING COMPANY. REFER TO PRE-ENGINEERED METAL BUILDING DRAWINGS FOR ADDITIONAL INFORMATION.

B. COLUMN LINES SHOWN FOR REFERENCE ONLY. COORDINATE GRID LAYOUT WITH PRE-ENGINEERED METAL BUILDING DRAWINGS.

C. REFER TO CIVIL DRAWINGS FOR RELATED SITE WORK, TYPICAL.

App Architecture
creative focused design
615 Woodside Drive, Englewood, Ohio 45322
T 937.836.8898 F 937.832.3696
www.app-arch.com

Facility Expansion
Remington Seeds
5585 SR 571 E, Greenville, OH 45331

ISSUE

NO.	DATE	DESCRIPTION
	08/06/21	BID SET

DATE	08/06/21
JOB NO.	3929.00
DRAWN	DRM / AJB
CHECKED	TJB

COPYRIGHT © 2021 - App Architecture, Inc.

TITLE
PARTIAL DEMOLTION & REFERENCE PLANS

SHEET NO.
A1.1

8/6/2021 3:32:07 PM

ROOM FINISH SCHEDULE

ROOM No.	ROOM NAME	FLOOR	BASE	WAINSCOT MAT.	WAINSCOT HT.	WALLS N	WALLS S	WALLS E	WALLS W	CEILING MAT.	REMARKS
- - -	EXIST. BLDG	- - -	- - -	- - -	- - -	- - -	- - -	- - -	- - -	- - -	
- - -	EXIST. BLDG.	- - -	- - -	- - -	- - -	- - -	- - -	- - -	- - -	- - -	
100	OFFICE	V.C.T.	RB-1	- - -	- - -	P-1	P-1	P-1	P-1	APC-1	1
102	RISER ROOM	CONC.	RB-1	- - -	- - -	P-1	P-1	P-1	P-1	- - -	1
103	UNISEX	V.C.T.	RB-1	- - -	- - -	P-1	PT-1	P-1	P-1	APC-1	1
104	VEST.	V.C.T.	RB-1	- - -	- - -	P-1	P-1	P-1	P-1	APC-1	1
105	CONNECTOR	CONC.	- - -	- - -	- - -	- - -	- - -	- - -	- - -	- - -	
106	CONNECTOR	CONC.	- - -	- - -	- - -	- - -	- - -	- - -	- - -	- - -	
107	CONNECTOR	CONC.	- - -	- - -	- - -	- - -	- - -	- - -	- - -	- - -	
108	WAREHOUSE	CONC.	- - -	- - -	- - -	- - -	- - -	- - -	- - -	- - -	1

ROOM FINISH SCHEDULE REMARKS

No.	REMARK
1	COORDINATE FINISH SELECTION WITH OWNER AND GENERAL CONTRACTOR (TYP.) FOR ALL FINISHES INCLUDING EXTERIOR METAL PANEL FINISHES.

MATERIAL LEGEND

SORT MATERIAL	ITEM	MATERIAL	MANUFACTURER	MATERIAL MODEL NO.	COLOR	FLAME / SMOKE	COMMENTS
BASE							
BASE	RB-1	RUBBER BASE	TARKETT/ JOHNSONITE/ OR EQUAL	- - -	PER GENERAL CONTRACTOR	CLASS C OR BETTER	
CABINETS							
CABINETS	PL-1	PLASTIC LAMINATE	FORMICA/ WILSONART/ NEVAMAR/ OR EQUAL	- - -	PER GENERAL CONTRACTOR	CLASS C OR BETTER	
CABINETS	SSM-1	SOLID SURFACE	CORIAN/ LG/ OR EQUAL	- - -	PER GENERAL CONTRACTOR	CLASS C OR BETTER	
CEILING							
CEILING	APC-1	ACOUSTIC PANEL CEILING	USG/ ARMSTRONG/ OR EQUAL	- - -	PER GENERAL CONTRACTOR	CLASS C OR BETTER	
CEILING	EXPS	EXPOSED STRUCTURE	- - -	- - -	PER GENERAL CONTRACTOR	CLASS C OR BETTER	
CEILING	GYB / P-1	GYPSUM BOARD PAINTED	SHERWIN-WILLIAMS/ BENJAMIN MOORE/ OR EQUAL	- - -	PER GENERAL CONTRACTOR	CLASS C OR BETTER	
DOORS							
DOORS	DEP-1	DOOR & FRAME PAINT	SHERWIN-WILLIAMS/ BENJAMIN MOORE/ OR EQUAL	- - -	PER GENERAL CONTRACTOR	CLASS C OR BETTER	
FLOOR							
FLOOR	SC-1	SEALED CONCRETE		- - -	PER GENERAL CONTRACTOR	CLASS C OR BETTER	
FLOOR	VCT-1	VINYL COMPOSITE TILE	INTERFACE/ ARMSTRONG/ TARKETT/ OR EQUAL	- - -	PER GENERAL CONTRACTOR	CLASS C OR BETTER	
SPECIALTY							
SPECIALTY	CG	CORNER GUARD	C-S GROUP/ INPRO CORP/ OR EQUAL	- - -	PER GENERAL CONTRACTOR	CLASS C OR BETTER	
WALL							
WALL	MTLP	METAL PANEL	AMERICAN BUILDING COMPANY	- - -	PER GENERAL CONTRACTOR	CLASS C OR BETTER	
WALL	P-1	PAINT	SHERWIN-WILLIAMS/ BENJAMIN MOORE/ OR EQUAL	- - -	PER GENERAL CONTRACTOR	CLASS C OR BETTER	
WALL	PT-1	PORCELAIN TILE	DALTILE/ OR EQUAL	- - -	PER GENERAL CONTRACTOR	CLASS C OR BETTER	

DOOR AND FRAME SCHEDULE

DOOR No.	ROOM NAME	DOOR SIZE W	DOOR SIZE H	DOOR SIZE T	DOOR MAT.	DOOR TYPE	DOOR FIN.	FRAME MAT.	FRAME TYPE	FRAME FIN.	HDW. SET	FRAME DETAILS HEAD	FRAME DETAILS JAMB	FIRE RTG.	REMARKS
100A	VEST.	3' - 0"	7' - 0"	1 3/4"	HM	F1	DEP-1	HM	1	DEP-1	1	C5/ A1.2	C7/ A1.2	- - -	4
102	RISER ROOM	6' - 0"	7' - 0"	1 3/4"	HM	F1	DEP-1	HM	1	DEP-1	2	- - -	- - -	45 MIN.	4
103	UNISEX	3' - 0"	7' - 0"	1 3/4"	HM	F1	DEP-1	HM	1	DEP-1	3	C5/ A1.2 SIM	C7/ A1.2 SIM	- - -	4
104A	VEST.	3' - 0"	7' - 0"	1 3/4"	HM	HG1	DEP-1	HM	1	DEP-1	4	- - -	- - -	- - -	4
104B	WAREHOUSE	3' - 0"	7' - 0"	1 3/4"	HM	F1	DEP-1	HM	1	DEP-1	5	C5/ A1.2 SIM	C7/ A1.2 SIM	- - -	4
105B	EXIST. BLDG	3' - 0"	7' - 0"	1 3/4"	HM	F1	DEP-1	HM	1	DEP-1	- - -	- - -	- - -	45 MIN.	3, 4
108A	WAREHOUSE	3' - 0"	7' - 0"	1 3/4"	HM	F1	DEP-1	HM	1	DEP-1	6	- - -	- - -	- - -	4
108B	WAREHOUSE	3' - 0"	7' - 0"	1 3/4"	HM	F1	DEP-1	HM	1	DEP-1	6	- - -	- - -	- - -	4
108C	WAREHOUSE	3' - 0"	7' - 0"	1 3/4"	HM	F1	DEP-1	HM	1	DEP-1	6	- - -	- - -	- - -	4
108D	WAREHOUSE	3' - 0"	7' - 0"	1 3/4"	HM	F1	DEP-1	HM	1	DEP-1	6	- - -	- - -	- - -	4
110	CONNECTOR	12' - 0"	14' - 0"	0"	- - -	OHD	FACTORY	- - -	2	FACTORY	- - -	B5/ A1.2	B6/ A1.2	3 - HOUR	5
X-100	EXIST. BLDG.	3' - 0"	7' - 0"	1 3/4"	HM	F1	- - -	- - -	- - -	- - -	- - -	- - -	- - -	- - -	2, 4
X-101	EXIST. BLDG.	3' - 0"	7' - 0"	1 3/4"	HM	F1	- - -	- - -	- - -	- - -	- - -	- - -	- - -	- - -	2, 4
X-102	WAREHOUSE	22' - 0"	14' - 0"	0"	- - -	EXIST.	- - -	- - -	- - -	- - -	- - -	- - -	- - -	3 - HOUR	1, 4
X-103	WAREHOUSE	9' - 0"	10' - 0"	0"	- - -	EXIST.	- - -	- - -	- - -	- - -	- - -	- - -	- - -	3 - HOUR	1, 4
X-104	WAREHOUSE	9' - 0"	10' - 0"	0"	- - -	EXIST.	- - -	- - -	- - -	- - -	- - -	- - -	- - -	3 - HOUR	1, 4
X-105	WAREHOUSE	9' - 0"	10' - 0"	0"	- - -	EXIST.	- - -	- - -	- - -	- - -	- - -	- - -	- - -	3 - HOUR	1, 4
X-106	WAREHOUSE	9' - 0"	10' - 0"	0"	- - -	EXIST.	- - -	- - -	- - -	- - -	- - -	- - -	- - -	3 - HOUR	1, 4

DOOR REMARKS

No.	REMARK
1	RELOCATED OVERHEAD DOOR AND DOOR FRAME FROM EXISTING FACILITY. COORDINATE REMOVAL OF DOOR(S) WITH OWNER AND GENERAL CONTRACTOR.
2	RELOCATED DOOR ASSEMBLY: DOOR, DOOR FRAME AND DOOR HARDWARE.
3	UL-RATED DOOR ASSEMBLY REQUIRED WHEN INSTALLED WITHIN 4'-0" OR LESS OF FIREWALL. RATING CAN BE ELIMINATED IF DOOR MOVES FURTHER FROM FIREWALL.
4	REFER TO PRE-ENGINEERED METAL BUILDING DRAWINGS FOR TYPICAL HEAD, JAMB AND SILL DETAILS IN CONJUNCTION WITH PRE-ENGINEERED METAL BUILDING.
5	FACE-OF-WALL MOUNTED OVERHEAD DOOR. BASIS OF DESIGN: OVERHEAD DOOR COMPANY, FIREKING, 3-HOUR UL-LISTED DOOR. COORDINATE AROUND EXISTING STEEL STRUCTURE. COORDINATE W/ ELECTRICAL ENGINEER.

DOOR HARDWARE SETS:

DOOR HARDWARE SETS ARE PRELIMINARY AND SHOULD BE FINALIZED WITH REMINGTON SEEDS AND GENERAL CONTRACTOR PRIOR TO SUBMITTAL

HARDWARE SET NO. 1

- 1 1/2 PAIR HINGES
- 1 SURFACE-MOUNTED CLOSER
- 1 OFFICE LOCKSET
- 3 SILENCERS
- 1 WALL STOP

HARDWARE SET NO. 2

- 3 PAIR HINGES
- 2 SURFACE-MTD CLOSERS
- 1 COORDINATOR
- 1 MANUAL FLUSHBOLT
- 1 STOREROOM LOCKSET
- 6 SILENCERS
- 1 THRESHOLD
- 1 WEATHERSTRIPPING

HARDWARE SET NO. 3

- 1 1/2 PAIR HINGES
- 1 PRIVACY LOCKSET
- 3 SILENCERS
- 1 WALL STOP

HARDWARE SET NO. 4

- 1 1/2 PAIR HINGES
- 1 OFFICE LOCKSET
- 1 SURFACE-MOUNTED CLOSER
- 1 WEATHERSTRIPPING
- 1 THRESHOLD
- 3 SILENCERS
- 1 WALL STOP

HARDWARE SET NO. 5

- 1 1/2 PAIR HINGES
- 1 OFFICE LOCKSET
- 3 SILENCERS

HARDWARE SET NO. 6

- 1 1/2 PAIR HINGES
- 1 EXIT DEVICE/ PUSH-BAR
- 1 SURFACE-MOUNTED CLOSER
- 1 WEATHERSTRIPPING
- 1 THRESHOLD
- 3 SILENCERS
- 1 WALL STOP

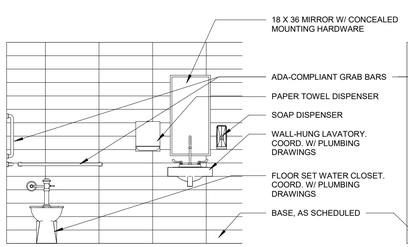

F3 INT. ELEV. -103 UNISEX
3/8" = 1'-0"

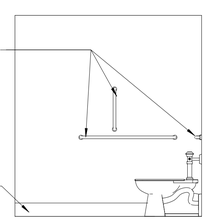

F4 INT. ELEV. -103 UNISEX
3/8" = 1'-0"

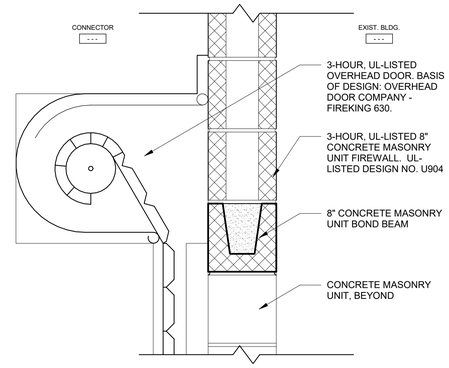

B5 HEAD DETAIL
1 1/2" = 1'-0"

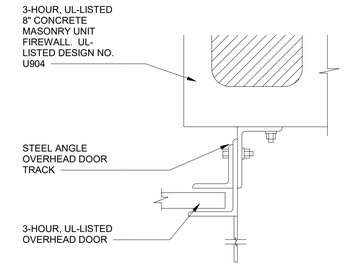

B6 JAMB DETAIL
3" = 1'-0"

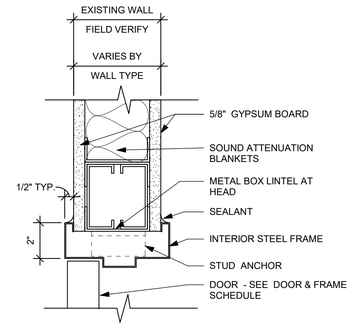

C5 HEAD DETAIL
3" = 1'-0"

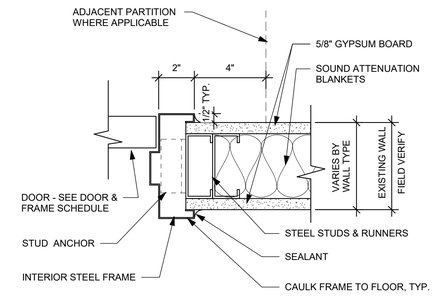

C7 JAMB DETAIL
3" = 1'-0"

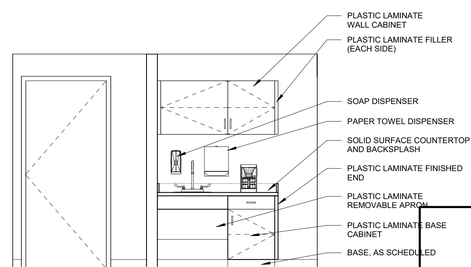

E4 INT. ELEV. - 104 VESTIBULE
3/8" = 1'-0"

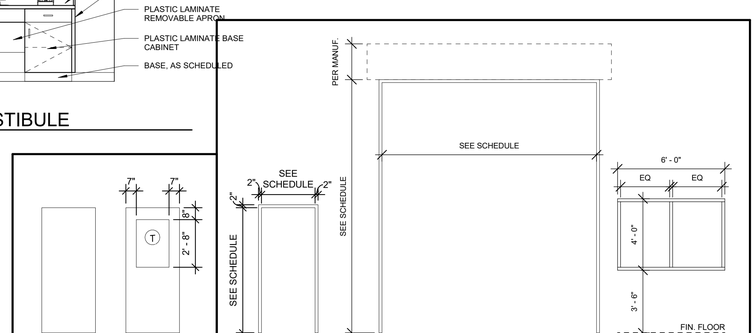

App Architecture
creative focused design
615 Woodside Drive, Englewood, Ohio 45322
T 937.836.8898 F 937.832.3696
www.app-arch.com

Facility Expansion
Remington Seeds
5585 SR 571 E, Greenville, OH 45331

ISSUE

NO.	DATE	DESCRIPTION
	08/06/21	BID SET

DATE	08/06/21
JOB NO.	3929.00
DRAWN	DRM / AJB
CHECKED	TJB

COPYRIGHT © 2021 - App Architecture, Inc.

TITLE
ENLARGED PLANS & SCHEDULES

SHEET NO.
A1.2

08/06/21 3:32:09 PM

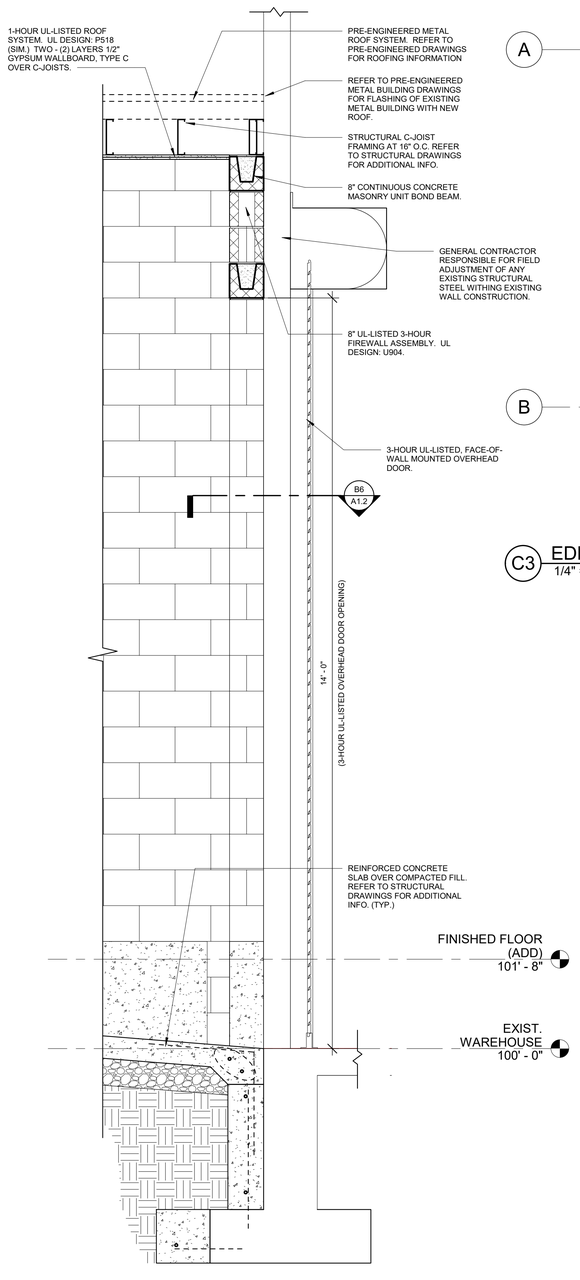

F1 ENLARGED SECTION
3/4" = 1'-0"

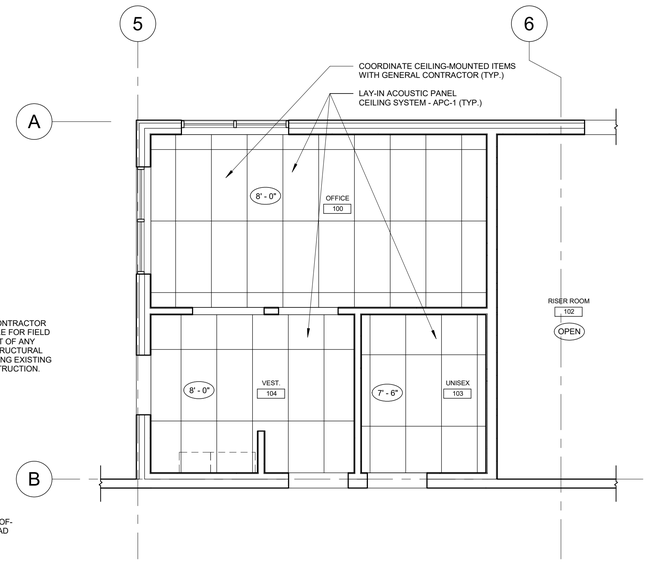

C3 EDLARGED PARTIAL R.C.P.
1/4" = 1'-0"

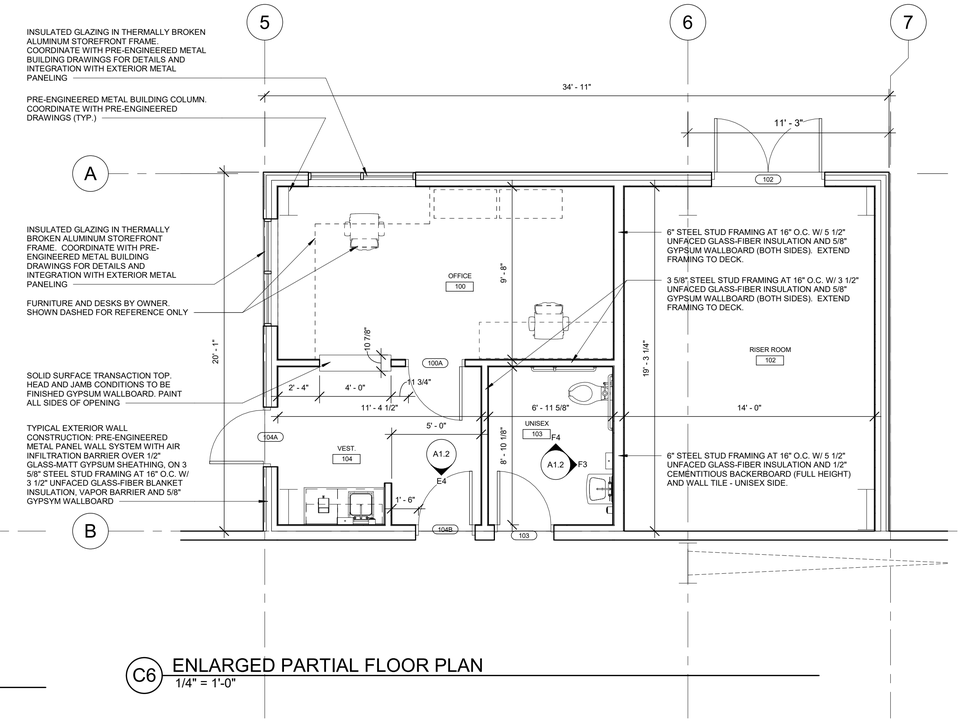

C6 ENLARGED PARTIAL FLOOR PLAN
1/4" = 1'-0"

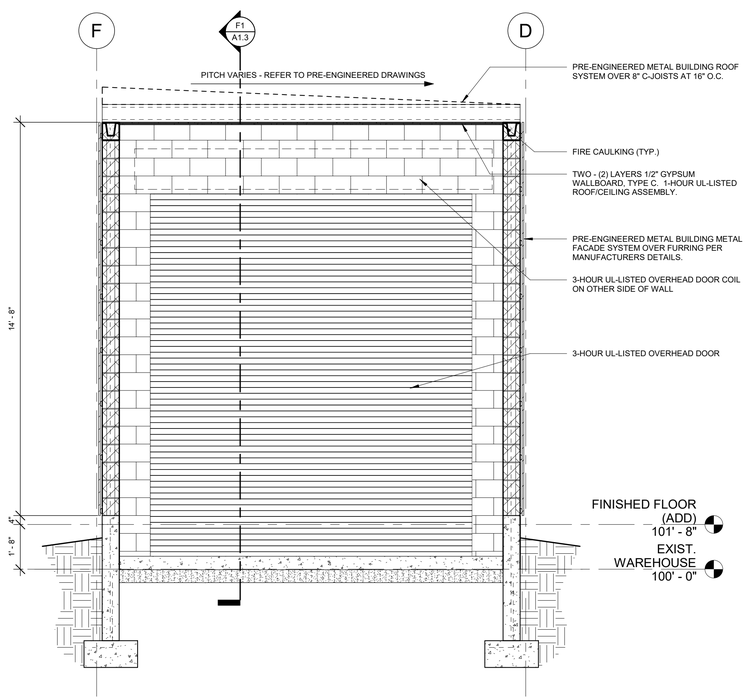

F3 ENLARGED CONNECTOR SECTION
3/8" = 1'-0"

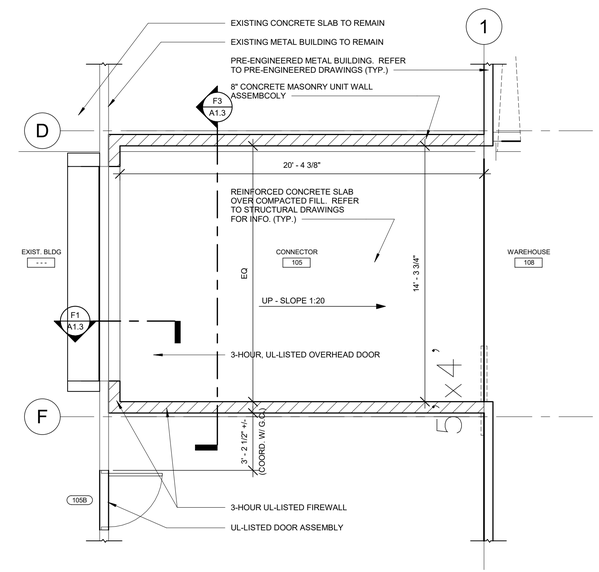

F6 ENLARGED CONNECTOR PLAN
1/4" = 1'-0"

App Architecture
creative focused design
615 Woodside Drive, Englewood, Ohio 45322
T 937.836.8898 F 937.832.3696
www.app-arch.com

Facility Expansion
Remington Seeds
5585 SR 571 E, Greenville, OH 45331

ISSUE

NO.	DATE	DESCRIPTION
	08/06/21	BID SET

DATE	08/06/21
JOB NO.	3929.00
DRAWN	DRM / AJB
CHECKED	TJB

COPYRIGHT © 2021 - App Architecture, Inc.

TITLE
ENLARGED PLANS & SECTIONS

SHEET NO.
A1.3

8/6/2021 3:32:11 PM

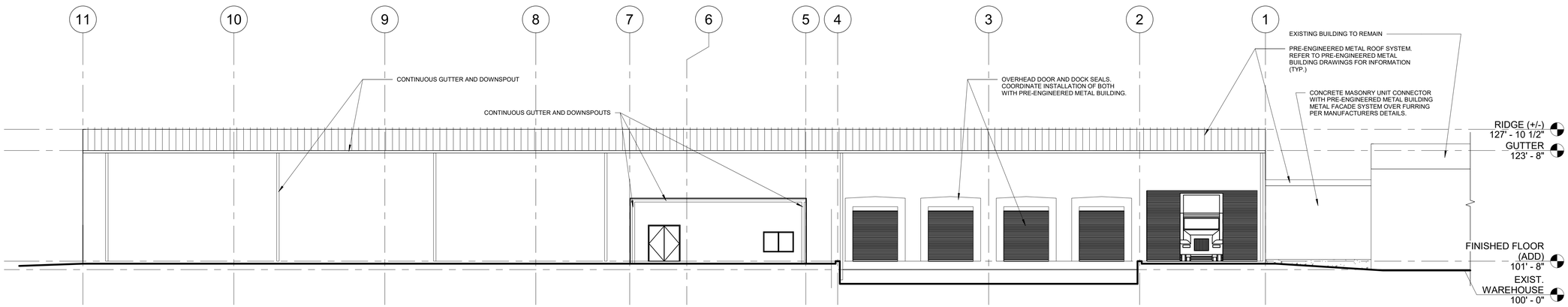

C1 EAST ELEVATION - REFERENCE ONLY
3/32" = 1'-0"

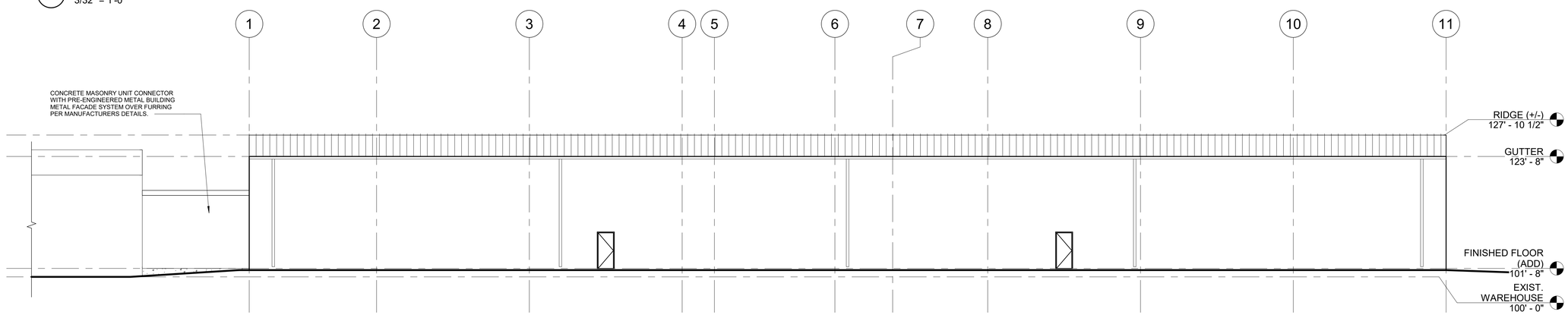

D1 WEST ELEVATION - REFERENCE ONLY
3/32" = 1'-0"

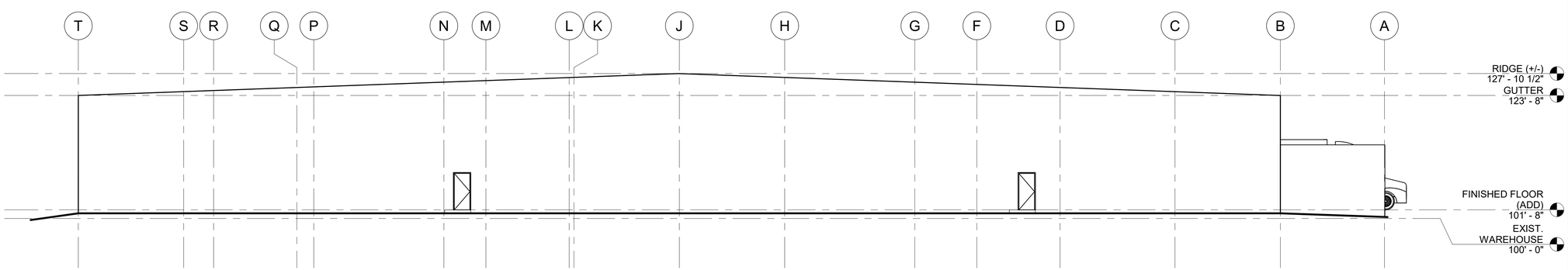

F1 SOUTH ELELVATION - REFERENCY ONLY
3/32" = 1'-0"

App Architecture
creative focused design
615 Woodside Drive, Englewood, Ohio 45322
T 937.836.8898 F 937.832.3696
www.app-arch.com

Facility Expansion
Remington Seeds
5585 SR 571 E, Greenville, OH 45331

ISSUE

NO.	DATE	DESCRIPTION
	08/06/21	BID SET

DATE	08/06/21
JOB NO.	3929.00
DRAWN	DRM / AJB
CHECKED	TJB

COPYRIGHT © 2021 - App Architecture, Inc.

TITLE
EXTERIOR ELEVATIONS

SHEET NO.
A3.1

8/6/2021 3:32:13 PM

A. GENERAL:

1. THE STRUCTURAL ENGINEER OF RECORD IS RESPONSIBLE FOR THE ADEQUACY OF THE STRUCTURAL DESIGN AS SHOWN IN THE CONTRACT DOCUMENTS WHICH DEPICT THE STRUCTURE IN ITS COMPLETED FORM. THE STRUCTURE IS DESIGNED TO BE CAPABLE OF WITHSTANDING CODE PRESCRIBED DESIGN FORCES AND FULLY STABLE WHEN THE STRUCTURE IS FULLY CONSTRUCTED (I.E., FULLY BUILT). IT IS SOLEY THE RESPONSIBILITY OF OTHERS TO DETERMINE ERECTION PROCEDURE AND SEQUENCE AS WELL AS TO PROVIDE FOR THE SAFETY OF THE STRUCTURE AND ITS COMPONENTS PARTS DURING ERECTION. THIS INCLUDES THE ADDITION OF WHATEVER SHORING, SHEETING, TEMPORARY BRACING, GUYS, TIE DOWNS, OR DE-WATERING WHICH MIGHT BE NECESSARY. SUCH MATERIAL SHALL REMAIN THE CONTRACTOR'S PROPERTY AFTER THE COMPLETION OF THE PROJECT.

2. IT IS SOLELY THE CONTRACTOR'S RESPONSIBILITY TO FOLLOW ALL APPLICABLE SAFETY CODES AND REGULATIONS DURING ALL PHASES OF CONSTRUCTION.

3. ALL ELEVATIONS GIVEN ON THE STRUCTURAL DRAWINGS ARE BASED ON THE GROUND FLOOR DATUM OF 100'-0" (U.N.O.).

4. SHOULD ANY OF THE DETAILED INSTRUCTIONS SHOWN ON THE PLANS CONFLICT WITH THE GENERAL STRUCTURAL NOTES, THE SPECIFICATIONS, OR WITH EACH OTHER, IT SHALL BE ASSUMED THAT THE STRICTEST PROVISION SHALL GOVERN AND A WRITTEN REQUEST FOR INFORMATION (RFI) SHALL BE SUBMITTED TO THE A/E. ADDITIONALLY, ALL ITEMS WHICH, IN THE OPINION OF THE CONTRACTOR, APPEAR TO BE DEFICIENCIES, OMISSIONS, OR AMBIGUITIES IN THE PLANS AND/OR SPECIFICATIONS SHALL BE BROUGHT TO THE IMMEDIATE ATTENTION OF THE A/E. CONTRACTOR SHALL SUBMIT RFI PRIOR TO COMMENCING WITH AFFECTED WORK AND SHALL AWAIT THE A/E'S APPROVAL-TO-PROCEED PRIOR TO PERFORMING WORK.

5. STRUCTURAL DRAWINGS ARE INTENDED TO BE USED WITH THE OTHER DRAWINGS RELEASED FOR THE PROJECT. CONTRACTOR TO COORDINATE, TO THE EXTENT POSSIBLE, SUCH INTERRELATIONSHIPS IN PROJECT SHOP DRAWINGS AND FIELD WORK.

6. DO NOT SCALE THESE DRAWINGS, USE DIMENSIONAL DATA PROVIDED.

7. REFER TO ARCHITECTURAL DRAWINGS AND SPECIFICATIONS FOR FIRE RATING REQUIREMENTS, FIRE-PROOFING METHODS, AND FIRE-PROOFING MATERIALS FOR STRUCTURAL MEMBERS.

B. DELEGATED DESIGN / DEFERRED SUBMITTALS:

1. DELEGATED DESIGN AND DEFERRED SUBMITTALS ARE ITEMS DESIGNED BY OTHERS. SHOP DRAWINGS AND CALCULATIONS SHALL BE GENERATED FOR THE DESIGN AND FABRICATION OF ALL DELEGATED DESIGN AND DEFERRED SUBMITTALS ITEMS INDICATED BELOW. THESE DRAWINGS AND CALCULATIONS SHALL BE SEALED AND SIGNED BY A PROFESSIONAL ENGINEER IN THE STATE WHERE THE PROJECT IS TO BE CONSTRUCTED. FOR ITEMS INDICATED AS "DESIGNED BY THE CONTRACTOR", "DESIGNED BY SUPPLIER", "DESIGNED BY FABRICATOR" AND "DESIGNED BY INSTALLER", IF THESE ENTITIES ARE NOT PROVIDING THEIR OWN ENGINEERING WITH THEIR DESIGNS COMPLETED BY A PROFESSIONAL ENGINEER WHO WILL SEAL AND SIGN THEIR SUBMITTALS THEN THESE ENTITIES WILL INDEPENDENTLY CONTRACT A THIRD PARTY TO PROVIDE THIS SERVICE ON THEIR BEHALF. UNLESS SPECIFIED ON THE DRAWINGS OR IN THE SPECIFICATIONS, DELEGATED DESIGN ITEMS SHALL BE DESIGNED FOR ALL CODE DEFINED LOADS PLUS INDUSTRY STANDARD LOADS INCLUDING GRAVITY LOADS AND LATERAL LOADS DUE TO WIND AND SEISMIC. SEE THE RELEVANT SECTIONS OF THE GENERAL NOTES SHEETS FOR ADDITIONAL DESIGN REQUIREMENTS. CALCULATIONS SHALL INCLUDE REVIEW OF THE CAPACITIES OF ALL SUPPORTING STRUCTURAL ELEMENTS INCLUDING LOCAL STRESSES DUE TO THE CONNECTION METHODS SELECTED. ADDITIONALLY, THE CALCULATIONS AND DRAWINGS SHALL CLEARLY INDICATE THE MAGNITUDES AND DIRECTIONS OF THE LOADS IMPARTED ON THE SUPPORTING STRUCTURAL ELEMENTS. THE LOADING CRITERIA USED FOR DESIGN OF THE DELEGATED DESIGN SYSTEMS AND COMPONENTS SHALL BE CLEARLY INDICATED ON THE DRAWINGS AND CALCULATIONS, REGARDLESS OF WHETHER THEY ARE MANDATED BY THE ENGINEER OF RECORD BY WAY OF THE DRAWING AND SPECIFICATIONS OR DERIVED BY THE DESIGNER.

2. TEMPORARY SHORING:
FOUNDATIONS - SHEET PILING, PILES AND LAGGING REQUIRED FOR INSTALLATION OF FOUNDATIONS AND FOUNDATION WALLS SHALL BE DESIGNED BY THE CONTRACTOR. EXCAVATIONS REQUIRED FOR FOUNDATION AND FOUNDATION WALL CONSTRUCTION NEXT TO EXISTING BUILDINGS, NEAR PROPERTY LINES AND NEAR OR OVER UTILITIES MUST BE CONSIDERED BY THE CONTRACTOR IN EVALUATING SHORING REQUIREMENTS.

3. MECHANICAL, ELECTRICAL, PLUMBING AND FIRE PROTECTION COMPONENTS:
ROOF-TOP UNITS - DESIGN OF THE MECHANICAL UNIT CURB, CONNECTIONS OF THE UNIT TO THE CURB AND CONNECTIONS OF THE CURB TO STRUCTURE SHALL BE PROVIDED BY THE MECHANICAL UNIT CONTRACTOR. ADDITIONAL SUPPORT FRAMING FOR SUPPORTING THE GRAVITY AND LATERAL LOADS SHALL BE DESIGNED, ENGINEERED AND PROVIDED IF IT IS NOT INDICATED ON THE STRUCTURAL DRAWINGS. IF ADDITIONAL SUPPORT FRAMING IS PROVIDED, THE STRUCTURAL ADEQUACY SHALL BE VERIFIED FOR ALL ASCE 7-16 LOAD COMBINATIONS. SHOPS DRAWINGS AND CALCULATIONS PROVIDED BY THE MECHANICAL CONTRACTOR SHALL PROVIDE DETAILS INDICATING THESE CONNECTIONS. SUPPORT AND BRACING OF DUCTWORK, PIPING, CONDUIT AND CABLE TRAYS ASSOCIATED WITH MECHANICAL, ELECTRICAL, PLUMBING AND FIRE PROTECTION COMPONENTS SHALL BE PROVIDED BY THE CONTRACTOR INSTALLING THE COMPONENTS. FOR PROJECTS IN SEISMIC DESIGN CATEGORY C, D AND HIGHER, SEISMIC BRACING OF ALL MECHANICAL AND ELECTRICAL COMPONENTS REQUIRED BY THE ASCE 7-16 SHALL BE DESIGNED BY THE MECHANICAL CONTRACTOR AND CLEARLY INDICATED AND DETAILED ON THE SHOP DRAWINGS.

4. STAIRS:
ALL INTERIOR AND EXTERIOR STAIRS AND LANDINGS SHALL BE DESIGNED AND ENGINEERED BY THE STAIR FABRICATOR. CONNECTIONS TO STRUCTURE SHALL BE DESIGNED BY THE STAIR FABRICATOR AND CLEARLY INDICATED AND COMMUNICATED TO THE ENGINEER OF RECORD PRIOR TO FABRICATION.UNLESS INDICATED ON THE DRAWINGS, ADDITIONAL FOUNDATIONS REQUIRED FOR STAIR SUPPORT SHALL BE DESIGNED THE FABRICATOR. IF A FOUNDATION IS INDICATED ON THE STRUCTURAL DRAWINGS, THE ADEQUACY OF THE FOUNDATION SHALL BE VERIFIED FOR THE LOADS RESULTING FROM THE STAIR FABRICATORS DESIGN. THE STAIR FABRICATOR SHALL CLEARLY INDICATE THE LOCATION OF THESE FOUNDATIONS AND THEIR INTERRELATIONSHIP WITH FOUNDATION OF THE PRIMARY STRUCTURE.

5. SUPPORTS FOR INTERIOR FINISHES AND ACCOUTERMENTS:
INTERIOR PARTITIONS, SOFFITS AND STOREFRONT SYSTEMS NOT PART OF THE MAIN BUILDING SHELL SHALL BE DESIGNED BY THE SUPPLIER. SUPPORTS AND CONNECTION TO STRUCTURE REQUIRED FOR ARTWORK, SPECIALTY LIGHTING SYSTEMS, MONITORS, VIDEO EQUIPMENT AND PROJECTION SCREENS, TELEVISIONS AND ANY OTHER MISCELLANEOUS ITEMS SHALL BE PROVIDED BY THE SUPPLIER.

6. WINDOWS, STOREFRONTS, GLAZING AND CURTAIN WALL SYSTEMS:
ALL EXTERIOR AND INTERIOR GLAZING SYSTEMS AND THEIR CONNECTIONS TO STRUCTURE SHALL BE DESIGNED BY THE SUPPLIER. CONNECTION LOCATIONS SHALL BE CLEARLY INDICATED AND COORDINATED WITH ARCHITECTURAL AND STRUCTURAL DETAILS.

DUE TO MOVEMENT OF THE STRUCTURAL FRAMING SYSTEMS FROM LATERAL WIND AND SEISMIC FORCES, THE GLAZING SYSTEM MUST BE DESIGNED TO ACCOMMODATE ¾" HORIZONTAL STORY DRIFT IN EACH DIRECTION AT EACH STORY LEVEL. THE DESIGN STORY DRIFT IS THE DIFFERENCE IN LATERAL DISPLACEMENT OF THE TOP OF THE STORY UNDER CONSIDERATION RELATIVE TO THE BOTTOM OF THAT STORY (TOP OF THE STORY BELOW).

THE CONNECTIONS OF THE GLAZING SYSTEM TO STRUCTURE CAN BE DESIGNED FOR THIS RELATIVE HORIZONTAL MOVEMENT. THE CONNECTIONS SHALL BE DESIGNED FOR ¾" HORIZONTAL (IN-PLANE) MOVEMENT IN ADDITION TO THE VERTICAL DEFLECTION REQUIREMENTS AS NOTED IN THE PLANS, DETAILS AND SPECIFICATIONS. IF THE CONNECTIONS ARE NOT DESIGNED FOR THE LATERAL MOVEMENT, THE GLAZING SYSTEM SHALL BE DESIGNED TO ACCOMMODATE ⅜" HORIZONTAL STORY DRIFT IN EACH DIRECTION AT EACH STORY LEVEL TO ACCOUNT FOR DIFFERENTIAL DISPLACEMENTS FROM LOAD REVERSALS IN THE STRUCTURAL SYSTEMS.

7. RAILING AND GUARDRAILS:
THE INTERIOR AND EXTERIOR RAILING AND GUARDRAILS SHALL BE DESIGN BY THE FABRICATOR. UNLESS SPECIFICALLY DETAILED ON THE ARCHITECTURAL OR STRUCTURAL DRAWINGS, THE FABRICATOR SHALL DESIGN THE CONNECTIONS TO STRUCTURE AND VERIFY THE CAPACITY OF THE RECEIVING STRUCTURAL ELEMENTS FOR LOADS DUE TO THEIR CONNECTIONS.

C. SOIL / STRUCTURE INTERACTION & SOIL PREPARATION INFORMATION:

1. DO NOT BACKFILL WALLS UNTIL CONCRETE HAS ATTAINED FOURTEEN (14) DAY STRENGTH OR LATERAL BRACING IS PROVIDED.

2. FOUNDATIONS HAVE BEEN DESIGNED ASSUMING AN ALLOWABLE SOIL BEARING PRESSURE OF 1500 POUNDS PER SQUARE FOOT (PSF) FOR ALL SPREAD FOOTERS. SOIL CONDITIONS SHALL BE INSPECTED BY A GEOTECHNICAL ENGINEER OR AN APPOINTED REPRESENTATIVE OF THE GEOTECHNICAL ENGINEER PRIOR TO CONCRETE PLACEMENT. THE GEOTECHNICAL ENGINEER (OR REPRESENTATIVE) SHALL BE THE SOLE JUDGE AS TO THE SUITABILITY OF THE BEARING MATERIAL.

D. DESIGN LOADS:

1. CODE REFERENCES:

a. OHIO BUILDING CODE (OBC) - 2017
b. ASCE 7-16, MINIMUM DESIGN LOADS FOR BUILDINGS AND OTHER STRUCTURES
c. BUILDING CODE REQUIREMENTS FOR STRUCTURAL CONCRETE AND COMMENTARY, ACI 318 - 2017
d. BUILDING CODE REQUIREMENTS FOR MASONRY STRUCTURES AND SPECIFICATIONS FOR MASONRY STRUCTURES AND COMMENTARIES, ACI 530 - 2016
e. COLD-FORMED STEEL DESIGN MANUAL, AISI - 2017
f. SPECIFICATIONS FOR THE DESIGN OF COLD-FORMED STEEL STRUCTURAL MEMBERS, AISI - 2017
g. CATALOG OF STANDARD SPECIFICATIONS AND LOAD TABLES FOR STEEL JOISTS AND JOIST GIRDERS, STEEL JOIST INSTITUTE - 2017
h. STEEL DECK INSTITUTE FLOOR DECK DESIGN MANUAL, 1st EDITION - MARCH 2014
i. STEEL DECK INSTITUTE ROOF DECK DESIGN MANUAL, 1st EDITION - MAY 2013
j. STEEL DECK INSTITUTE DIAPHRAGM DESIGN MANUAL, 4th EDITION - SEPTEMBER 2015
k. STEEL DECK INSTITUTE MANUAL OF CONSTRUCTION WITH STEEL DECK - OCTOBER 2016
l. STEEL DECK INSTITUTE STANDARD PRACTICE DETAILS - MAY 2001
m. MANUAL OF STEEL CONSTRUCTION - AISC, 15th EDITION - 2017
n. SPECIFICATION FOR STRUCTURAL JOINTS USING ASTM A325 OF A490 BOLTS - 01 AUGUST 2014
o. STRUCTURAL WELDING CODE - STEEL, ANSI/AWS D1.1 - 2015
p. FEMA 405 - NEHRP RECOMMENDED PROVISIONS FOR SEISMIC REGULATIONS FOR NEW BLDGS AND OTHER STRUCTURES - 2015

DEAD LOADS:

ROOF DEAD LOAD 20 PSF

LIVE LOADS:

FLOOR LIVE LOADS:

OCCUPANCY TYPES:	DISTRIBUTED LOADS	CONCENTRATED LOAD (ON 2.5 SF AREA)
STORAGE WAREHOUSE	125 PSF	
STAIRS/LANDINGS/PLATFORMS/EXITS	100 PSF	300 LB (ON 4.5 SQ. IN. OF TREAD)

ROOF LIVE LOAD:
MINIMUM DESIGN ROOF LIVE LOAD 20 PSF

SNOW LOAD PARAMETERS:

a. GROUND SNOW LOAD, Pg 20 PSF
b. FLAT-ROOF SNOW LOAD, Pf 16.8 PSF
c. THERMAL FACTOR, Ct 1.2
d. EXPOSURE FACTOR, Ce 1.0
e. ROOF SLOPE FACTOR, Cs 1.0
f. SNOW LOAD IMPORTANCE FACTOR, I 1.0

WIND DESIGN PARAMETERS:

a. BASIC WIND SPEED = 115 MPH
b. WIND LOAD IMPORTANCE FACTOR = 1.0
c. WIND EXPOSURE = EXPOSURE C
d. MAIN WIND DESIGN VELOCITY PRESSURES:

HEIGHT (FT.)	WINDWARD WALL	LEEWARD WALL	SIDEWALLS
0-15	22.0 PSF	-17.8 PSF / -10.3 PSF	-22.8 PSF
15-20	22.9 PSF	-17.8 PSF / -10.3 PSF	-22.8 PSF
20-25	23.7 PSF	-17.8 PSF / -10.3 PSF	-22.8 PSF

COMPONENT AND CLADDING - WALLS

AREA (SQ. FT.)	INERIOR ZONE	EDGE ZONE
10	30.8 PSF	37.9 PSF
100	26.6 PSF	29.4 PSF
200	25.4 PSF	27.0 PSF
500	23.7 PSF	23.7 PSF

SEISMIC DESIGN PARAMETERS:

a. OCCUPANCY CATEGORY II
b. SITE CLASS D
c. IMPORTANCE FACTOR 1.0
d. SEISMIC DESIGN CATEGORY: B
e. RESPONSE MODIFICATION COEFFICIENT, R 3¼
f. 0.2 SECOND DESIGN SPECTRAL RESPONSE, Sds 19.1%
g. 1.0 SECOND DESIGN SPECTRAL RESPONSE, Sd1 11.2%
h. DEFLECTION AMPLIFICATION FACTOR, Cd 3¼
j. ANALYSIS PROCEDURE: EQUIVALENT LATERAL FORCE PROCEDURE
k. SEISMIC FORCE-RESISTING SYSTEM: STEEL ORDINARY CONCENTRICALLY BRACED FRAMES
l. SEISMIC BASE SHEAR: V = Cs x WEIGHT

SCHEDULE OF SPECIAL INSPECTION SERVICES PER CHAPTER 17 OF INTERNATIONAL BUILDING CODE. SEE SECTION 1704.3 "CONTRACTOR RESPONSIBILITY"

E. REINFORCED CONCRETE:

1. MATERIALS:

a. SEE SPECIFICATIONS FOR DETAILED REQUIREMENTS RELATED TO THE CONCRETE TO BE USED ON THIS PROJECT.

b. STRUCTURAL CONCRETE OVERVIEW - SEE SPECS FOR SPECIFIC INFO

LOCATION	f'c (PSI)
FOUNDATIONS AND GRADE BEAMS	3000
TYP. INTERIOR CONCRETE	4000
EXTERIOR CONCRETE EXPOSED TO DE-ICING	4500, 6% AIR
BACKFILL BELOW FOOTINGS, CONCRETE FILL IN STRUCTURES	1500

c. ALL DEFORMED REINFORCING BARS: FY = 60,000 P.S.I.

d. WELDED WIRE FABRIC: ASTM A185

2. FIELD MANUAL:

PROVIDE AT LEAST ONE COPY OF THE LATEST ACI FIELD REFERENCE MANUAL, SP-15, IN THE FIELD OFFICE AT ALL TIMES.

3. CONTINGENCIES:

PROVIDE LEAN CONCRETE UNDER FOUNDATIONS FOR ACCIDENTAL OVER-EXCAVATION, SOFT SPOTS AND TRENCHES.

4. FOOTINGS, PIERS, WALLS AND SLABS:

a. DOWELS IN FOOTINGS TO MATCH VERTICAL PIER OR WALL REINFORCING, U.N.O.

b. PROVIDE CORNER BARS AT WALL AND FOOTING CORNERS TO MATCH HORIZONTAL REINFORCING, MINIMUM LENGTH OF EACH LEG - 45 BAR DIAMETERS. (PLACE AS PER DETAILS U.N.O.).

c. PROVIDE 10 MIL. POLYETHYLENE VAPOR RETARDER AND 6" COMPACTED AGGREGATE SUBBASE MATERIAL ON TOP IN ACCORDANCE WITH THE TYPICAL SLAB DETAILS. UNDER ALL INTERIOR SLABS ON GRADE, VAPOR RETARDER SHALL BE CARRIED TO AND PLACED IN CONTACT W/RIGID INSULATION AT INTERIOR FACE OF EXTERIOR FOUNDATION WALLS. SEE SPECIFICATIONS FOR FURTHER INFORMATION.

5. CONSTRUCTION JOINTS:

CONSTRUCTION JOINTS PERMITTED ONLY WHERE SHOWN OR AS APPROVED BY THE STRUCTURAL ENGINEER. ALL CONSTRUCTION JOINTS ARE TO BE KEYED.

6. CHAMFER:

PROVIDE 3/4" CHAMFER AT ALL EXPOSED EDGES OF CONCRETE, U.N.O.

7. MISCELLANEOUS:

a. SEE ARCHITECTURAL, MECHANICAL, ELECTRICAL, AND PLUMBING DRAWINGS FOR OPENINGS AND COORDINATE WORK WITH THE CONSTRUCTION MANAGER AND OTHER TRADES. IF OPENING IS NOT SHOWN ON THE STRUCTURAL DRAWINGS, OBTAIN PRIOR APPROVAL.

8. CONCRETE COVER:

U.N.O. DETAIL REINFORCING TO PROVIDE MINIMUM CONCRETE COVER AS FOLLOWS:

CONCRETE CAST AGAINST AND PERMANENTLY EXPOSED TO EARTH:	3 IN.
CONCRETE EXPOSED TO EARTH OR WEATHER:	
No. 6 - No. No. 18 BARS	2 IN.
No. 5 BAR, W31 OR D31 WIRE, AND SMALLER	1½ IN.
CONCRETE NOT EXPOSED TO EARTH OR WEATHER OR IN CONTACT WITH GROUND:	
SLABS, WALLS, AND JOISTS:	
No. 14 AND No. 18 BARS	1½ IN.
No. 11 BARS AND SMALLER	¾ IN.
BEAMS AND COLUMNS:	
PRIMARY REINFORCEMENT, STIRRUPS, TIES AND SPIRALS	1½ IN.
SURFACES EXPOSED TO LIQUIDS:	2 IN.
SLABS ON GRADE - 1/3 SLAB THICKNESS FROM TOP OF SLAB OR AS SHOWN ON DRAWINGS	

TENSION LAP SCHEDULE:

f'c = 3000 PSI TENSION LAP SPLICE LENGTHS (INCHES) - TOP BARS (NOTES 1 AND 2)

BAR COVER (INCHES)	3/4			1 1/2			3		
BAR SPACING (INCHES)	2 1/2	4	>=6	2 1/2	4	>=6	2 1/2	4	>=6
#4	29	29	29	29	29	29	29	29	29
#5	36	36	36	36	36	36	36	36	36
#6	43	43	43	43	43	43	43	43	43
#7	69	69	69	66	63	63	66	63	63
#8	-	-	-	86	72	72	86	72	72
#9	-	-	-	109	81	81	109	81	81

f'c = 4000 PSI TENSION LAP SPLICE LENGTHS (INCHES) - TOP BARS (NOTES 1 AND 2)

BAR COVER (INCHES)	3/4			1 1/2			3		
BAR SPACING (INCHES)	2 1/2	4	>=6	2 1/2	4	>=6	2 1/2	4	>=6
#4	25	25	25	25	25	25	25	25	25
#5	31	31	31	31	31	31	31	31	31
#6	37	37	37	37	37	37	37	37	37
#7	60	60	60	57	54	54	57	54	54
#8	-	-	-	74	62	62	74	62	62
#9	-	-	-	94	70	70	94	70	70

NOTES:
1. TOP BARS ARE DEFINED AS HORIZONTAL BARS WITH MORE THAN 12" OF CONCRETE CAST BELOW THE BARS.
2. FOR BARS OTHER THAN TOP BARS, DIVIDE DEVELOPMENT LENGTH SPECIFIED IN TABLE BY 1.3.
3. INTERPOLATE FOR SPLICE LENGTHS AS NECESSARY
4. TENSION LAP SPLICES ARE BASED ON CLASS B. FOR CLASS A, DIVIDE BY 1.3. UNLESS NOTED OTHERWISE IN DRAWINGS, ASSUME ALL SPLICES AS CLASS B.
5. IF SPLICE DIMENSION IS INDICATED IN DRAWINGS, PROVIDE LARGER SPLICE LENGTH.
6. LAP SPLICE TABLES ARE BASED ON ACI 318-02, SECTIONS 12.2.2, 12.2.3 & 12.14.2
7. VALUES SHOWN IN TABLE MAY BE LOWERED WITH Ktr IF TRANSVERSE REINFORCEMENT EXISTS PER 12.2.3.

ENGINEERING
7949 Washington Woods Dr.
Dayton, OH 45459
www.LtwoE.com

NOT FOR CONSTRUCTION

NEW STORAGE BUILDING
REMINGTON SEED
5585 State Route 571 GREENVILLE, OHIO 45331

ISSUE

NO.	DATE	DESCRIPTION
	8/06/21	ISSUED FOR FINAL BID

DATE	8/06/2021
JOB NO.	2021056
DRAWN	JMR
CHECKED	JMR

COPYRIGHT © 2021 - App Architecture, Inc.

TITLE
GENERAL NOTES

SHEET NO.
S0.1

F. METAL BUILDING DESIGN REQUIREMENTS:

1. METAL BUILDING MANUFACTURER SHALL PROVIDE SHOP DRAWINGS AND CALCULATIONS STAMPED BY A PROFESSIONAL ENGINEER LICENSED IN THE STATE OF OHIO.

2. THE WIND AND SEISMIC DESIGN PARAMETERS FOR THE PROJECT SITE ARE PROVIDED ON SHEET S.01 OF THE STRUCTURAL DRAWINGS.

3. THE METAL BUILDING MANUFACTURER TO COORDINATE OPENINGS IN THE ROOF AND WALLS WITH MECHANICAL DRAWINGS.

4. THE METAL BUILDING SUPPLIER IS RESPONSIBLE FOR THE DESIGN OF THE LIGHT-GAUGE METAL STUD WALLS AND THEIR CONNECTIONS TO THE METAL BUILDING STRUCTURE AND FOUNDATIONS.

   THE EXTERIOR WALLS SHALL BE DESIGNED TO BE SUPPORTED BY THE METAL BUILDING SYSTEM. THE WALLS SHALL NOT BE DESIGNED TO BE CANTILEVERED OFF THE FOUNDATION SYSTEM UNLESS SPECIFICALLY ACCEPTED BY THE ENGINEER OF RECORD.

5. THE PRIMARY STRUCTURE OF THE METAL BUILDING SHALL BE LATERALLY SUPPORTED BY CROSS-BRACING AT THE EXTERIOR WALLS AND PORTAL FRAMES WHERE OPENINGS OCCUR.

6. THE METAL BUILDING MANUFACTURER SHALL DESIGN THE ROOF STRUCTURE FOR THE DESIGN LOADS INDICATED ON SHEET S.01 OF THE STRUCTURAL DRAWINGS, INCLUDING:

   METAL BUILDING MANUFACTURER IS RESPONSIBLE FOR DESIGN OF THE STEEL JOIST ROOF SYSTEM AND ITS CONNECTIONS TO THE MAIN BUILDING FRAMING SYSTEM.

   NET UPLIFT ON THE MEMBERS AND THEIR CONNECTIONS DUE TO WIND PRESSURE BASED ON ASCE 7-10 AND THE STEEL JOIST INSTITUTE DESIGN STANDARDS AND SPECIFICATIONS.

   THE COLLATERAL LOAD REQUIRED FOR SUPPORT OF THE MECHANICAL, PLUMBING, ELECTRICAL, AND FIRE-SUPPRESSION SYSTEMS SHALL BE DETERMINED BY REVIEW OF THE DRAWINGS PROVIDED BY THESE DISCIPLINES. A MINIMUM COLLATERAL LOAD OF 5 POUNDS PER SQUARE FOOT (PSF) IS REQUIRED.

7. THE METAL BUILDING SYSTEM SHALL BE DESIGNED FOR THE FOLLOWING DEFLECTION CRITERIA BASED ON THE APPLICATION OF THE DESIGN LOADS ON SHEET S0.1 FOR THE STRUCTURAL DRAWINGS. WHEN DESIGNING THE ELEMENTS OUTLINED BELOW FOR WIND RESISTANCE BASED ON DEFLECTION PERFORMANCE, 0.70 TIMES THE ASCE 7-10 WIND LOAD VALUES MAY BE USED FOR DESIGN.

   MAIN BUILDING FRAMES HORIZONTAL MOVEMENT ADJACENT TO TWO-STORY SPACE: HEIGHT / 200

   MAIN BUILDING FRAMES HORIZONTAL MOVEMENT, OTHER: HEIGHT / 100

   VERTICAL LIVE LOAD DEFLECTION OF FRAMING MEMBERS: SPAN / 180

   HORIZONTAL DEFLECTION OF GIRTS SUPPORTING MASONRY WALLS: LENGTH / 480, MINIMUM

   HORIZONTAL DEFLECTION OF GIRTS SUPPORTING STUDS WITH VENEER: LENGTH / 480

   DEFLECTION OF WALLS SUPPORTING BRICK VENEER: SPAN / 600

   DEFLECTION OF WALLS SUPPORTING METAL PANEL: SPAN / 120

8. THE METAL BUILDING MANUFACTURER SHALL PROVIDE THE SIZE, MATERIAL AND LAYOUT OF THE ANCHOR BOLTS REQUIRED TO THE METAL BUILDING TO FOUNDATION INTERFACE. THE ENGINEER OF RECORD WILL DESIGN THE CONCRETE DETAILS AND THE EMBEDMENT DEPTH OF THE ANCHOR BOLTS BASED ON DESIGN REACTIONS PROVIDED BY THE METAL BUILDING MANUFACTURER.

G. MASONRY:

1. CONCRETE MASONRY UNIT (CMU):
   CONCRETE MASONRY UNIT ASSEMBLIES SHALL HAVE A MINIMUM COMPRESSIVE STRENGTH OF f'm=1500 PSI.

2. HORIZONTAL JOINTS IN ALL CMU WALLS SHALL BE REINFORCED WITH TRUSS-TYPE REINFORCING AS FOLLOWS: EVERY OTHER COURSE AND TOP (2) COURSES FOR ABOVE & BELOW GRADE WALLS. PROVIDE PREFABRICATED CORNERS AND TEES. LAP A MIN. OF 24"

3. MORTAR:
   MORTAR SHALL BE TYPE "S". WITH A MINIMUM COMPRESSIVE STRENGTH AT 28 DAYS OF1800 PSI AND SHALL CONFORM TO IBC SECTION 2103. FOR HOLLOW CORE USE TYPE "N".

4. MASONRY GROUT:

   a. GROUT SHALL HAVE A MINIMUM COMPRESSIVE STRENGTH OF 2000 PSI AT 28 DAYS AND SHALL CONFORM TO IBC SECTION 2103.

   b. ALL VERTICAL REINFORCING BARS SHALL BE GROUTED SOLID.

   c. ALL HORIZONTAL REINFORCING BARS SHALL BE GROUTED SOLID.

   d. GROUTING OF MASONRY BEAMS OVER OPENINGS SHALL BE PERFORMED IN ONE CONTINUOUS OPERATION.

   e. GROUTING SHALL BE STOPPED 1 1/2" BELOW THE TOP OF A COURSE AND 1/2" BELOW THE TOP OF A BOND BEAM SO AS TO FORM A KEY AT THE POUR JOINT.

5. MASONRY REINFORCING STEEL:

   a. REINFORCING SHALL CONFORM TO IBC SECTION 2103 AND ACI 530.

   b. DEFORMED BARS SHALL BE GRADE 60, AND SHALL BE SECURELY PLACED BY REBAR POSITIONERS.

   c. REINFORCING STEEL TO BE WELDED SHALL CONFORM TO ASTM A706.

6. MASONRY WALL REINFORCING:

   a. PROVIDE THE FOLLOWING MINIMUM REINFORCEMENT UNLESS NOTED ON DRAWINGS.

      FOR 8" NOMINAL THICKNESS WALL:
      VERTICAL: #5 BARS AT 32" O.C. AT CENTERLINE
      HORIZONTAL: (2)#4 x CONTINUOUS AT 8'-0" O.C. IN GROUTED BOND BEAMS
      FOR 12" NOMINAL THICKNESS WALL:
      VERTICAL: #6 BARS AT 24" O.C. AT CENTERLINE
      HORIZONTAL: (2)#5 x CONTINUOUS AT 8'-0" O.C. IN GROUTED BOND BEAMS

   b. REINFORCING BOND BEAMS SHALL BE PROVIDED AT ALL FLOOR AND ROOF LINES AND AT THE TOP OF WALLS. PROVIDE A BOND BEAM ABOVE AND BELOW ALL OPENINGS AND EXTEND THESES BARS 48 BAR DIAMETERS PAST THE OPENING AT EACH SIDE.

   c. HORIZONTAL REINFORCING SHALL BE PROVIDED AT 16" O.C. UNLESS NOTED OTHERWISE. COORDINATE BRICK ANCHORS WITH JOINT REINFORCING LOCATIONS SEE SPECIFICATIONS.

   d. OPEN-ENDED LINTEL BLOCKS SHALL BE USED AT THE HEAD OF ALL OPENINGS UNLESS NOTED OTHERWISE.

   e. PROVIDE TWO BARS, MATCHING VERTICAL BAR SIZE, FOR THE FULL HEIGHT OF THE WALL AT EACH SIDE OF OPENINGS, WALL ENDS AND INTERSECTIONS. DOWELS TO MASONRY WALLS SHALL BE EMBEDDED A MINIMUM OF 1'-6' OR HOOKED INTO THE SUPPORTING STRUCTURE AND BE OF THE SAME SIZE AND SPACING AS WALL REINFORCING.

   f. EXTEND ALL VERTICAL REINFORCING INTO THE FOUNDATION WALL BELOW AND A MINIMUM OF 24" ABOVE ALL OPENINGS. (U.N.O.)

   g. ALL VERTICAL BARS SHALL BE HELD IN PLACE WITH REBAR POSITIONERS.

   h. DOWELS FROM FOUNDATION WALL SHALL BE VERT. W/NO MORE THAN 1 HORIZ. TO 6 VERT. OUT OF PLUMB. FOUNDATION DOWELS SHALL MATCH AND LAP WITH ALL VERTICAL WALL REINFORCING INDICATED ABOVE UNLESS NOTED OTHERWISE. PROVIDE STANDARD 90° HOOK AT BOTTOM OF FOOTINGS UNLESS NOTED OTHERWISE.

   j. ALL VERTICAL REINFORCING SHALL BE FULL HEIGHT OF WALLS, UNLESS NOTED OTHERWISE.

   k. PROVIDE CORNER BARS TO MATCH THE HORIZONTAL WALL REINFORCING AT WALL INTERSECTIONS. LAP ALL BARS AT SPLICES 48 DIAMETERS, WITH A MINIMUM LAP OF 18" U.N.O.

   l. ALL BOLTS, ANCHORS, EMBEDDED ITEMS AND MISCELLANEOUS STEEL INSERTED INTO THE WALLS SHALL BE GROUTED SOLID INTO POSITION.

7. MASONRY LINTELS:

   a. SEE ARCH. DRAWINGS FOR ACTUAL OPENING SIZES AND LOCATIONS.

   b. ALL REINFORCING SHALL EXTEND BEYOND JAMBS AND SHALL BE GROUTED SOLID FOR THE DEPTH 'D'.

   c. ALL LINTELS SHALL BE ADEQUATELY SHORED DURING THE GROUTING OPERATION AND SHORING SHALL REMAIN IN PLACE FOR AT LEAST 14 DAYS AFTER COMPLETION OF GROUTING OPERATIONS.

   d. MASONRY CONTRACTOR SHALL BUILD LOOSE STEEL LINTEL ANGLES INTO MASONRY COURSING. MINIMUM ANGLE SIZES AND END BEARING LENGTHS SHALL BE PROVIDED PER THE SCHEDULE BELOW.

   e. SEE SCHEDULE FOR HORIZONTAL REINFORCING REQUIREMENTS AND GROUTING DEPTH ABOVE OPENING WHEN WALLS ARE PARTIALLY GROUTED.

G. MASONRY (Cont.):

8. MASONRY MISCELLANEOUS:

   a. PROVIDE 100% SOLID GROUTED BEARING, MIN. 3 COURSES UNDER BEAMS.

   b. HOLLOW MASONRY UNITS TO BE LAID WITH FULL MORTAR COVERAGE ON HORIZONTAL AND VERTICAL FACE SHELLS. WEBS SHALL ALSO BE BEDDED IN ALL UNITS.

   c. MASONRY OPENINGS 8" AND LESS MAY BE PROVIDED. ANY VERTICAL BARS INTERRUPTED SHALL BE REPLACED WITH FULL HEIGHT VERTICAL BARS EACH SIDE OF OPENING. ANY OPENINGS GREATER THAN 8" SHALL BE COORDINATED AND APPROVED BY STRUCTURAL ENGINEER OF RECORD PRIOR TO INSTALLATION. NEVER CUT BOND BEAM BARS IN HOLES FOR OTHERS WITHOUT APPROVAL OF THE STRUCTURAL ENGINEER OF RECORD.

   d. GROUT UNDER BEARING PLATES TO BE NON-SHRINKING, NON-METALLIC TYPE.

   e. A MESH SCREEN SHALL BE PLACED BELOW ALL BOND BEAMS TO CONTAIN GROUT.

   f. SET BEARING PLATES IN BOND BEAMS AFTER THE GROUT IS PLACED, BUT WHILE IT IS STILL PLASTIC.

NON-LOAD BEARING MASONRY LINTEL SCHEDULE FOR 8" CMU WALLS (FOR 1000 PLF MAX)

OPENING WIDTH	8" CMU	
	HORIZ. REINF	GROUT 'D'
UP TO 3'-4"	2 - #5	16"
3'-5" THRU 5'-4"	2 - #5	16"
5'-5" THRU 7'-4"	2 - #5	24"
7'-5" THRU 9'-4"	2 - #5	32"
9'-5" THRU 11'-4"	2 - #5	32"

OPENINGS GREATER THAN 11'-4", SHALL BE DESIGNED AND COORDINATED BY STRUCTURAL ENGINEER OF RECORD.

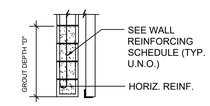

TYPICAL NON-LOAD BEARING LINTEL SECTION

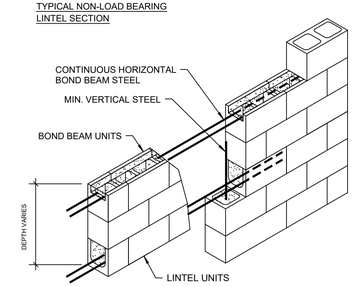

TYPICAL MASONRY BLOCK SHAPES & SECTIONS

7949 Washington Woods Dr.
Dayton, OH 45459
www.LtwoE.com

NOT FOR CONSTRUCTION

NEW STORAGE BUILDING

REMINGTON SEED

5585 State Route 571 GREENVILLE, OHIO 45331

ISSUE

NO.	DATE	DESCRIPTION
	8/06/21	ISSUED FOR FINAL BID

DATE	8/06/2021
JOB NO.	2021056
DRAWN	JMR
CHECKED	JMR

COPYRIGHT © 2021 - App Architecture, Inc.

TITLE
GENERAL NOTES

SHEET NO.
S0.2

TABLE 1704.5.1 LEVEL 1 MASONRY SPECIAL INSPECTION

VERIFICATION AND INSPECTION	FREQUENCY OF INSPECTION		REFERENCE FOR CRITERIA		
	CONTINUOUS DURING TASK LISTED	PERIODICALLY DURING TASK LISTED	IBC SECTION	ACI 530/ASCE 5/TMS 402a	ACI 530.1/ASCE 6/TMS 602a
1. AS MASONRY CONSTRUCTION BEGINS, THE FOLLOWING SHALL BE VERIFIED TO ENSURE COMPLIANCE.					
A. PROPORTIONS OF SITE-PREPARED MORTAR.	--		--	--	
B. CONSTRUCTION OF MORTAR JOINTS.	--		--	--	
C. LOCATION OF REINFORCEMENT, CONNECTORS, PRESTRESSING TENDONS AND ANCHORAGES.	--		--	--	
D. PRESTRESSING TECHNIQUE	--		--	--	
E. GRADE AND SIZE OF PRESTRESSING TENDONS AND ANCHORAGES.	--		--	--	
2. THE INSPECTION PROGRAM SHALL VERIFY:	--				
A. SIZE AND LOCATION OF STRUCTURAL ELEMENTS.	--		--	--	
B. TYPE, SIZE, AND LOCATION OF ANCHORS, INCLUDING OTHER DETAILS OF ANCHORAGE OF MASONRY TO STRUCTURAL MEMBERS, FRAMES OR OTHER CONSTRUCTION.	--		--		--
C. SPECIFIED SIZE, GRADE AND TYPE OF REINFORCEMENT.	--		--		
D. WELDING OF REINFORCING BARS.		--	--		--
E. PROTECTION OF MASONRY DURING COLD WEATHER (TEMPERATURE BELOW 40°F) OR HOT WEATHER (TEMPERATURE ABOVE 90°F).	--			--	
F. APPLICATION AND MEASUREMENT OF PRESTRESSING FORCE.	--		--	--	
3. PRIOR TO GROUTING, THE FOLLOWING SHALL BE VERIFIED TO ENSURE COMPLIANCE	--				
A. GROUT SPACE IS CLEAN.	--		--	--	
B. PLACEMENT OF REINFORCEMENT AND CONNECTORS AND PRESTRESSING TENDONS AND ANCHORAGES.	--		--		
C. PROPORTIONS OF SITE-PREPARED GROUT AND PRESTRESSING GROUT FOR BONDED TENDONS.	--		--	--	
D. CONSTRUCTION OF MORTAR JOINTS.	--		--	--	
4. GROUT PLACEMENT SHALL BE VERIFIED TO ENSURE COMPLIANCE WITH CODE AND CONSTRUCTION DOCUMENT PROVISIONS.		--	--	--	
A. GROUTING OF PRESTRESSING BONDED TENDONS.		--	--	--	
5. PREPARATION OF ANY REQUIRED GROUT SPECIMENS, MORTAR SPECIMENS AND/OR PRISMS SHALL BE OBSERVED.		--		--	
6. COMPLIANCE WITH REQUIRED INSPECTION PROVISIONS OF THE CONSTRUCTION DOCUMENTS AND THE APPROVED SUBMITTALS SHALL BE VERIFIED.	--		--	--	

FOR ST °C = (°F - 32) / 1.8
A. THE SPECIFIC STANDARDS REFERENCED ARE THOSE LISTED IN CH. 35

TABLE 1704.3 REQUIRED VERIFICATION AND INSPECTION OF STEEL CONSTRUCTION

VERIFICATION AND INSPECTION	CONTINUOUS	PERIODIC	REFERENCED STANDARD	IBC REFERENCE
1. MATERIAL VERIFICATION OF HIGH-STRENGTH BOLTS, NUTS, AND WASHERS:				
A. IDENTIFICATION MARKINGS TO CONFORM TO ASTM STANDARDS SPECIFIED IN THE APPROVED CONSTRUCTION DOCUMENTS.	--	X	APPLICABLE ASTM MATERIAL SPECIFICATIONS; AISC 360, SECTION A 3.3	--
B. MANUFACTURE'S CERTIFICATE OF COMPLIANCE REQUIRED.	--	X	--	--
2. INSPECTION OF HIGH-STRENGTH BOLTING:				
A. BEARING-TYPE CONNECTIONS.	--	X	AISC 360, SECTION M2.5	1704.3.3
B. SLIP-CRITICAL CONNECTIONS	X	X		
3. MATERIAL VERIFICATION OF STRUCTURAL STEEL:				
A. IDENTIFICATION MARKINGS TO CONFORM TO ASTM STANDARDS SPECIFIED IN THE APPROVED CONSTRUCTION DOCUMENTS.	--	--	ASTM A 6 OR ASTM A 568	1706.4
B. MANUFACTURER'S CERTIFIED MILL TEST REPORTS.	--	--	ASTM A 6 OR ASTM A 568	
4. MATERIAL VERIFICATION OF WELD FILLER MATERIALS:				
A. IDENTIFICATION MARKINGS TO CONFORM TO AWS SPECIFICATION IN THE APPROVED CONSTRUCTION DOCUMENTS.	--	--	AISC 360, SECTION A 3.5	--
B. MANUFACTURER'S CERTIFICATE OF COMPLIANCE REQUIRED.	--	--	--	--
5. INSPECTION OF WELDING: A. STRUCTURAL STEEL:	--	--		
1) COMPLETE AND PARTIAL PENETRATION GROOVE WELDS.	X	--	AWSD1.1	1074.3.1
2) MULTIPASS FILLET WELDS.	X	--		
3) SINGLE-PASS FILLET WELDS > 5/16"	X	--		
4) SINGLE-PASS FILLET WELDS < 5/16"	--	X		
5) FLOOR AND ROOF DECK WELDS.	--	X	AWSD 1.3	--
B. REINFORCING STEEL: 1) VERIFICATION OF WELDABILITY OF REINFORCING STEEL OTHER THAN ASTM A 706.	--	X	AWS D 1.4 ACL318: 3.5.2	--
2) REINFORCING STEEL-RESISTING FLEXURAL AND AXIAL FORCES IN INTERMEDIATE AND SPECIAL MOMENT FRAMES, AND BOUNDARY ELEMENTS OF SPECIAL REINFORCED CONCRETE SHEAR WALLS AND SHEAR REINFORCEMENT.	X	--		
3) SHEAR REINFORCEMENT.	X	--		
4) OTHER REINFORCING STEEL.	--	X		
6. INSPECTION OF STEEL FRAME JOINT DETAILS FOR COMPLIANCE WITH APPROVED CONSTRUCTION DOCUMENTS:	--	X	--	1704.3.2
A. DETAILS SUCH AS BRACING AND STIFFENING.				
B. MEMBER LOCATIONS.				
C. APPLICATION OF JOINT DETAILS AT EACH CONNECTION.				

TABLE 1704.4 REQUIRED VERIFICATION AND INSPECTION OF CONCRETE CONSTRUCTION

VERIFICATION AND INSPECTION	CONTINUOUS	PERIODIC	REFERENCED STANDARD	IBC REFERENCE
1. INSPECTION OF REINFORCING STEEL, INCLUDING PRESTRESSING TENDONS, AND PLACEMENT.	--	X	ACI 318: 3.5, 7.1-7.7	1913.4
2. INSPECTION OF REINFORCING STEEL WELDING IN ACCORDANCE WITH TABLE 1704.3, ITEM 5B.	--	--	AWS D1.4 ACI 318: 3.5.2	--
3. INSPECT BOLTS TO BE INSTALLED IN CONCRETE PRIOR TO AND DURING PLACEMENT OF CONCRETE WHERE ALLOWABLE LOADS HAVE BEEN INCREASED.	X	--	--	1911.5
4. VERIFYING USE OF REQUIRED DESIGN MIX.	--	X	ACI 318: Ch. 4, 5.2-5.4	1904.2.2, 1913.2, 1913.3
5. AT THE TIME FRESH CONCRETE IS SAMPLED TO FABRICATE SPECIMENS FOR STRENGTH TESTS, PERFORM SLUMP AND AIR CONTENT TESTS, AND DETERMINE THE TEMPERATURE OF THE CONCRETE.	X	--	ASTM C 172 ASTM C 31 ACI 318: 5.6, 5.8	1913.10
6. INSPECTION OF CONCRETE AND SHOTCRETE PLACEMENT FOR PROPER APPLICATION TECHNIQUES.	X	--	ACI 318: 5.9, 5.10	1913.6, 1913.7, 1913.8
7. INSPECTION FOR MAINTENANCE OF SPECIFIED CURING TEMPERATURE AND TECHNIQUES.	--	X	ACI 318: 5.11, 5.13	1913.9
8. INSPECTION OF PRESTRESSED CONCRETE:				
A. APPLICATION OF PRESTRESSING FORCES.	X	--	ACI 318: 18.20	--
B. GROUTING OF BONDED PRESTRESSING TENDONS IN THE SEISMIC-FORCE-RESISTING SYSTEM.	X	--	ACI 318: 18.18.4	--
9. ERECTION OF PRECAST CONCRETE MEMBERS.	--	X	ACI 318: Ch. 16	--
10. VERIFICATION OF IN-SITU CONCRETE STRENGTH, PRIOR TO STRESSING OF TENDONS IN POST-TENSIONED CONCRETE AND PRIOR TO REMOVAL OF SHORES AND FORMS FROM BEAMS AND STRUCTURAL SLABS.	--	X	ACI 318: 6.2	--
11. INSPECT FORMWORK FOR SHAPE, LOCATION, AND DIMENSIONS OF THE CONCRETE MEMBER BEING FORMED.	--	X	ACI 318: 6.1.1	--

TABLE 1704.7 REQUIRED VERIFICATION AND INSPECTION OF SOILS

VERIFICATION AND INSPECTION TASK	CONTINUOUS	PERIODIC
1. VERIFY MATERIALS BELOW FOOTINGS ARE ADEQUATE TO ACHIEVE THE DESIGN BEARING CAPACITY.	--	X
2. VERIFY EXCAVATIONS ARE EXTENDED TO PROPER DEPTH AND HAVE REACHED PROPER MATERIAL.	--	X
3. PERFORM CLASSIFICATION AND TESTING OF CONTROLLED FILL MATERIALS.	--	X
4. VERIFY USE OF PROPER MATERIALS, DENSITIES, AND LIFT THICKNESSES DURING PLACEMENT AND COMPACTION OF CONTROLLED FILL.	X	--
5. PRIOR TO PLACEMENT OF CONTROLLED FILL, OBSERVE SUBGRADE AND VERIFY THAT SITE HAS BEEN PREPARED PROPERLY.	--	X

SPECIAL INSPECTION PROGRAM NOTES:

1. PERIODIC INSPECTION FREQUENCY DETERMINED BY THE DESIGN PROFESSIONAL, UNLESS NEEDED OTHERWISE.
2. CONTINUOUS OR PERIODIC SELECTION TO BE MADE BY THE DESIGN PROFESSIONAL BASED ON BUILDING CATEGORY AND DESIGN METHODOLOGY.

SPECIAL INSPECTION/TESTING PROGRAM

1. THE SPECIAL INSPECTOR SHALL BE A QUALIFIED PERSON WHO SHALL DEMONSTRATE COMPETENCE TO THE SATISFACTION OF THE BUILDING OFFICIAL FOR THE INSPECTION OF THE PARTICULAR TYPE OF CONSTRUCTION OR OPERATION STIPULATED.
2. IF NECESSARY, THE CONTRACTOR SHALL ARRANGE A PRE-CONSTRUCTION MEETING WITH THE ARCHITECT, ENGINEER, BUILDING OFFICIAL, AND TESTING AGENCY TO REVIEW THE SPECIAL INSPECTION REQUIREMENTS.
3. DUTIES OF THE SPECIAL INSPECTOR INCLUDE, BUT ARE NOT LIMITED TO:
   A. ACKNOWLEDGE AND CONFORM TO THE SPECIAL INSPECTION REQUIREMENTS OF IBC.
   B. THE SPECIAL INSPECTOR SHALL OBSERVE THE WORK FOR CONFORMANCE WITH THE APPROVED PERMIT PLANS AND SPECIFICATIONS. ALL DISCREPANCIES SHALL BE BROUGHT TO IMMEDIATE ATTENTION OF THE CONTRACTOR FOR CORRECTION, THEN, IF UNCORRECTED, TO THE ATTENTION OF THE ARCHITECT, THE ENGINEER AND THE BUILDING OFFICIAL.
   C. THE SPECIAL INSPECTOR SHALL FURNISH INSPECTION REPORTS FOR EACH INSPECTION TO THE CONTRACTOR, THE ARCHITECT, THE ENGINEER AND THE BUILDING OFFICIAL AS A MINIMUM. THE REPORTS SHALL BE DISTRIBUTED IN A TIMELY MANNER.
   D. INSPECTION FOR PREFABRICATED COMPONENTS SHALL BE THE SAME AS IF THE MATERIAL WAS INSTALLED ON SITE. CONTINUOUS INSPECTION SHALL NOT BE REQUIRED DURING THE PREFABRICATION IF THE APPROVED AGENCY CERTIFIES THE CONSTRUCTION AND FURNISHES EVIDENCE OF COMPLIANCE.
   E. THE SPECIAL INSPECTOR SHALL SUBMIT A FINAL REPORT STATING WHETHER THE WORK REQUIRING INSPECTION WAS INSPECTED AND WHETHER THE WORK WAS COMPLETED IN CONFORMANCE WITH THE APPROVED PLANS AND SPECIFICATION AND IN CONFORMANCE WITH ANY APPLICABLE WORKMANSHIP PROVISIONS OF THE APPLICABLE CODE.
4. SPECIAL INSPECTION AND TESTING REQUIREMENTS APPLY EQUALLY TO ALL BIDDER DESIGNED COMPONENTS.

STRUCTURAL OBSERVATION:

1. STRUCTURAL OBSERVATION CONFORMING TO THE 2012 IBC SECTION 1704 WILL BE PERFORMED BY AN *L2 ENGINEERING* REPRESENTATIVE IN ORDER TO REVIEW THE CONTRACTOR'S WORK FOR GENERAL CONFORMANCE WITH THE DESIGN DOCUMENTS.
2. THE CONTRACTOR SHALL PROVIDE *L2 ENGINEERING* WITH A MINIMUM OF 3 DAYS NOTICE TO PROPERLY SCHEDULE THE OBSERVATION VISIT.
3. IF ADDITIONAL ENGINEERING TIME IS REQUIRED DUE TO INCOMPLETE OR UNACCEPTABLE WORK BY THE CONTRACTOR, *L2 ENGINEERING* SHALL BE REIMBURSED FOR ALL ASSOCIATED COSTS.
4. STRUCTURAL OBSERVATION FOR THIS PROJECT WILL OCCUR AT THE FOLLOWING STAGES:
   a. DURING CONCRETE PLACEMENT

A
A/E - ARCHITECT/ENGINEER
AB - ANCHOR BOLT/ROD
AFF - ABOVE FINISH FLOOR
ARCH. - ARCHITECT (URAL)
B
BFF - BELOW FINISH FLOOR
BLK - BLOCK (ING)
BM - BEAM
BRG - BEARING
BU - BUILT UP
B/ - BOTTOM OF
C
CAM (C=) - CAMBER
CIP - CAST-IN-PLACE
CJ - CONTROL JOINT
CL - CENTERLINE
CLR - CLEAR
CMU - CONCRETE MASONRY UNIT
COL - COLUMN
CONC - CONCRETE
CONN - CONNECT (ION)
CONT - CONTINUOUS
CONTR - CONTRACT (OR)
CTR - CENTER
CU - CUBIC
D
D - DEEP, DEPTH
DBL - DOUBLE
DEMO - DEMOLITION, DEMOLISH
DET - DETAIL
DIA - DIAMETER
DIAG - DIAGONAL, DIAGRAM
DIM - DIMENSION
DIR - DIRECTION
DL - DEAD LOAD
DR - DRAIN
DWG - DRAWING
E
EA - EACH
EF - EACH FACE
EJ - EXPANSION JOINT
EL, ELEV - ELEVATION
EMBED - EMBEDMENT
EQ - EQUAL
EST - ESTIMATE
EW - EACH WAY
EQUIP - EQUIPMENT
EXP - EXPANSION
EXT - EXTERIOR
F
FD - FLOOR DRAIN
FF - FINISHED FLOOR
FIN - FINISH (ED)
FLG - FLANGE
FLR - FLOOR (ING)
FOC - FACE OF CONCRETE
FOM - FACE OF MASONRY
FOS - FACE OF STUD
FOW - FACE OF WALL
FS - FAR SIDE
FT - FOOT, FEET
FTG - FOOTING
FRMG - FRAMING
FUT - FUTURE
G
GA - GAGE, GAUGE
GALV - GALVANIZED
GC - GENERAL CONTRACTOR
GEN - GENERAL
GL - GRADE LINE
GLU-LAM - GLUE-LAMINATED BEAM
GR BM - GRADE BEAM
GYP BD - GYPSUM BOARD
H
H - HIGH
HAS - HEADED ANCHOR STUD
HC - HOLLOW CORE
HDR - HEADER
HGR - HANGER
HORIZ - HORIZONTAL
HR - HANDRAIL
HS - HIGH STRENGTH
HSB - HIGH STRENGTH BOLT
HSS - HOLLOW STRUCTURAL SHAPE
HT - HEIGHT
I
ID - INSIDE DIAMETER
INCL - INCLUDING
INT - INTERIOR
J
JST - JOIST
JT - JOINT
K
K - KIPS (1000 lbs.)
KCJ - KEYED CONSTRUCTION JOINT
KLF - KIPS PER LINEAR FOOT
KSF - KIPS PER SQUARE FOOT
KSI - KIPS PER SQUARE INCH
L
L - ANGLE
LL - DOUBLE ANGLE
LBS - POUNDS
LG - LONG
LL - LIVE LOAD
LLH - LONG LEG HORIZONTAL
LLV - LONG LEG VERTICAL
LOC - LOCATION
LONG - LONGITUDINAL
LSL - LAMINATED STRAND LUMBER
LT WT - LIGHT WEIGHT
LVL - LAMINATED VENEER LUMBER
M
MATL - MATERIAL
MAX - MAXIMUM
MBR - MEMBER
MC - MISCELLANEOUS CHANNEL
MECH - MECHANICAL
MEZZ - MEZZANINE
MFD - MANUFACTURED
MFR - MANUFACTURER
MIN - MINIMUM
MISC - MISCELLANEOUS
MTL - METAL
N
NA - NOT APPLICABLE
NIC - NOT IN CONTRACT
NO - NUMBER
NOM - NOMINAL
NS - NEAR SIDE
NTS - NOT TO SCALE
O
OC - ON CENTER
OD - OUTSIDE DIAMETER
OH DR - OVERHEAD DOOR
OPNG - OPENING
OPP - OPPOSITE
OSB - ORIENTED STRAND BOARD
OVS - OVERSIZED
P
PAF - POWDER ACTUATED FASTENER
PCF - POUNDS PER CUBIC FOOT
PL - PLATE
PLF - POUNDS PER LINEAR FOOT
PLYWD - PLYWOOD
PNL - PANEL
PR - PAIR, PIPE RAIL
PRCST - PRECAST
PREFAB - PREFABRICATED
PSF - POUNDS PER SQUARE FOOT
PSI - POUNDS PER SQUARE INCH
PT - POST TENSION (ED), PRESSURE TREATED
R
R - RADIUS
RCP - REINFORCED CONCRETE PIPE
RD - ROOF DRAIN
REF - REFERENCE
REINF - REINFORCING
REQ'D - REQUIRED
REV - REVISION
RO - ROUGH OPENING
S
SCHED - SCHEDULE
SECT - SECTION
SHT - SHEET
SHTHG - SHEATHING
SIM - SIMILAR
SL - SNOW LOAD
SLV - SLEEVE
SOG - SLAB-ON-GRADE
SPEC - SPECIFICATION
SQ - SQUARE
SSL - SHORT SLOTTED
SST - STAINLESS STEEL
STD - STANDARD
STIF - STIFFENER
STL - STEEL
SUSP - SUSPENDED
SW - SHEAR WALL
SYMM - SYMMETRICAL
T
T&B - TOP AND BOTTOM
T&G - TONGUE AND GROOVE
TBD - TO BE DETERMINED
THK - THICK (NESS)
TL - TOTAL LOAD
TO - TOP OF
TOB - TOP OF BEAM
TOC - TOP OF CONCRETE
TOCW - TOP OF CONCRETE WALL
TOF - TOP OF FOOTING
TOM - TOP OF MASONRY
TOS - TOP OF STEEL
TOW - TOP OF WALL
TRANS - TRANSVERSE
TYP - TYPICAL
U
UNO - UNLESS NOTED OTHERWISE
V
V - SHEAR
VERT - VERTICAL
VIF - VERIFY IN FIELD
VR - VAPOR RETARDER
VRFY - VERIFY
W
W - WIDTH
W/ - WITH
W/O - WITHOUT
WD - WOOD
WF - WIDE FLANGE
WL - WIND LOAD
WLD - WELD (ED)
WP - WATERPROOFING, WORK POINT
WS - WATERSTOP
WT - WEIGHT
WWF - WELDED WIRE FABRIC
Y
YD - YARD

L2 ENGINEERING
7949 Washington Woods Dr.
Dayton, OH 45459
www.LtwoE.com

STATE OF OHIO
JONATHAN MICHAEL ... E-...7926
REGISTERED PROFESSIONAL ENGINEER
NOT FOR CONSTRUCTION

NEW STORAGE BUILDING
REMINGTON SEED
5585 State Route 571 GREENVILLE, OHIO 45331

ISSUE

NO.	DATE	DESCRIPTION
	8/06/21	ISSUED FOR FINAL BID

DATE	8/06/2021
JOB NO.	2021056
DRAWN	JMR
CHECKED	JMR

COPYRIGHT © 2021 - App Architecture, Inc.

TITLE
SPECIAL INSPECTIONS

SHEET NO.
S0.3

FOUNDATION PLAN

SCALE : 1/16" = 1'-0"

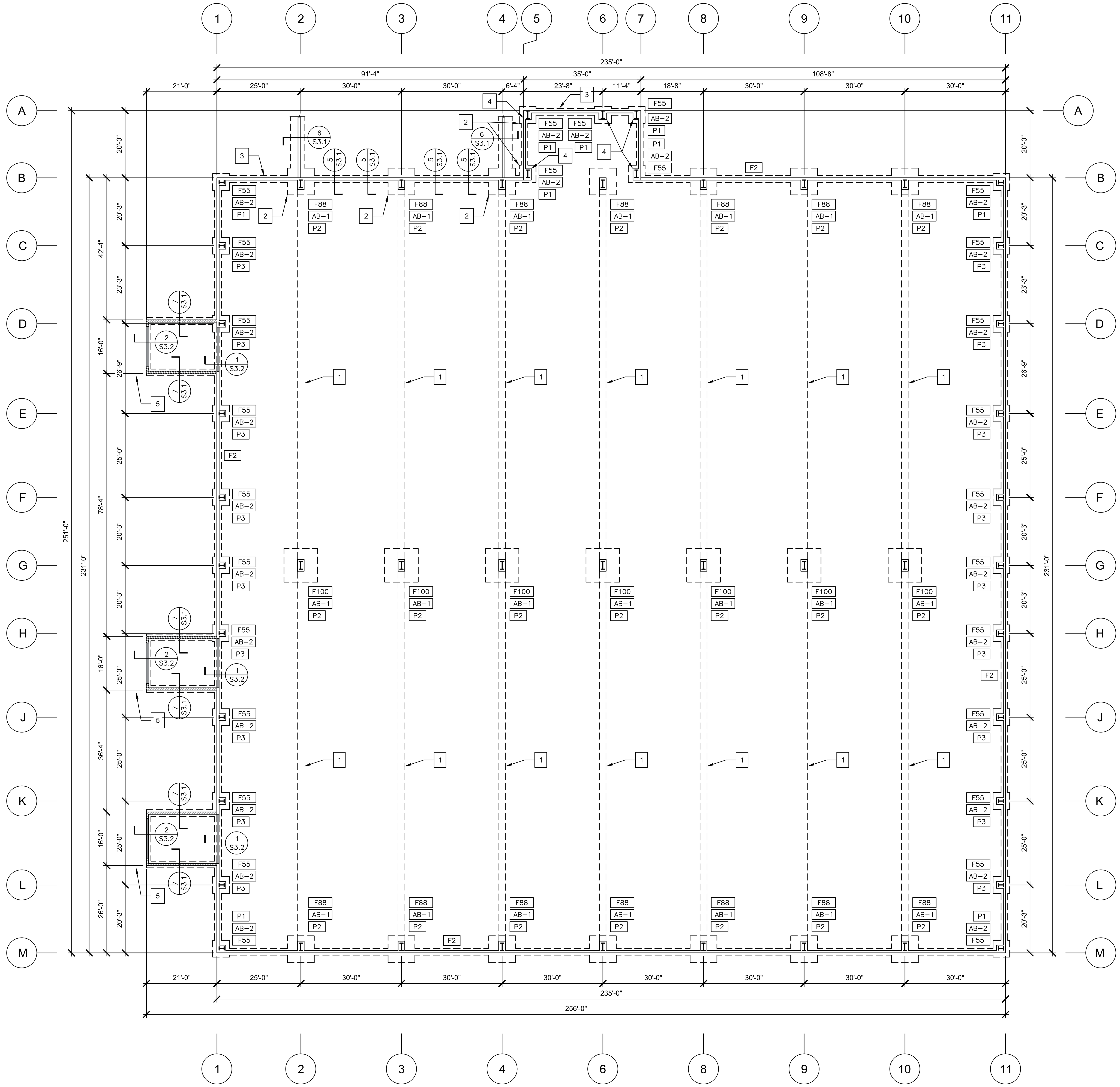

FOUNDATION NOTES:

1. 5" THICK CONCRETE SLAB-ON-GRADE w/ 6x6 - W2.0 x W2.0 WWF OVER 6" MIN. COMPACTED GRANULAR BASE & 6 MIL VAPOR BARRIER. T/SLAB = 100'-0"
2. PROVIDE CONTROL JOINTS IN SLAB-ON-GRADE AT 12'-6" O.C. MAX.
3. T/PEDESTAL = 100'-0" U.N.O.
4. T/FOOTING = 98'-0" U.N.O.
5. CENTER ALL COLUMN FOOTINGS UNDER COLUMN CENTERLINES, U.N.O.
6. REFER TO P.E.M.B. SUBMITTAL FOR ANCHOR BOLT LOCATIONS. SEE BELOW FOR EMBEDMENT AND DIAMETER:

   AB-1 15" EMBEDMENT 1" DIAMETER
   AB-2 12" EMBEDMENT 3/4" DIAMETER

7. AT ALL PERIMETER DOORWAYS, POUR SLAB THROUGH EDGE PER DETAIL 4/S3.1. FOR ANTI-HEAVE STOOP, REFER TO DETAIL 9/S3.1. REFER TO ARCH. DWG's FOR EXACT LOCATIONS AND DIMENSIONS OF DOORS.

1 PLAN NOTES:

1. 18" WIDE GRADE BEAM w/ (2) #5 CONT. BARS TOP & BOTTOM. BOTTOM OF GRADE BEAM = 98'-0".
2. TOP OF FOOTING = 94'-0".
3. STEP FOOTING AS REQUIRED PER DETAIL 8/S3.1.
4. TOP OF PEDESTAL & STEM WALL = 100'-4" (AT OFFICE LOCATION ONLY).
5. ONE NEW HSS4x4x1/4 FULL-HEIGHT JAMB (EXISTING HSS4x4 WILL BE THE OTHER JAMB) & ONE NEW HSS6x4x1/4 HEADER REQUIRED AT NEW OPENING IN EXISTING BUILDING.

PEDESTAL SCHEDULE

MARK	SIZE		REINFORCING	
	WIDTH	LENGTH	VERTICAL BARS	LATERAL TIES[4]
P1	2'-4"	2'-8"	(8) #6	#4 AT 12" O.C.
P2	2'-0"	3'-6"	(10) #6	#4 AT 12" O.C.
P3	2'-0"	2'-8"	(8) #6	#4 AT 12" O.C.

NOTES:
1. SEE APPLICABLE SECTIONS FOR ADDITIONAL INFORMATION.
2. REFER TO PLAN FOR ORIENTATION.
3. REINFORCING SHALL HAVE 2" CLEAR COVER FROM FACE OF PEDESTAL.
4. PROVIDE (3) #4 LATERAL TIES WITHIN TOP 6" OF PEDESTAL.

FOOTING SCHEDULE: (ISOLATED FOOTINGS)

MARK	SIZE			REINFORCING
	LENGTH	WIDTH	THICKNESS	
F55	5'-0"	5'-0"	14"	(6) #6 EA. WAY
F88	8'-0"	8'-0"	16"	(9) #8 EA. WAY
F100	10'-0"	10'-0"	18"	(12) #8 EA. WAY

FOOTING SCHEDULE: (CONTINUOUS FOOTINGS)

MARK	SIZE		REINFORCING	REMARKS
	WIDTH	SIZE		
F2	2'-0"	12"	(3) #5 CONT.	–

L2 ENGINEERING
7949 Washington Woods Dr.
Dayton, OH 45459
www.LtwoE.com

STATE OF OHIO JONATHAN MICHAEL E-77926 REGISTERED PROFESSIONAL ENGINEER

NOT FOR CONSTRUCTION

NEW STORAGE BUILDING
REMINGTON SEED
5585 State Route 571 GREENVILLE, OHIO 45331

ISSUE

NO.	DATE	DESCRIPTION
	8/06/21	ISSUED FOR FINAL BID

DATE	8/06/2021
JOB NO.	2021056
DRAWN	JMR
CHECKED	JMR

COPYRIGHT © 2021 - App Architecture, Inc.

TITLE **FOUNDATION PLAN**

SHEET NO. **S1.0**

1 2 3 4 5 6 7

A B C D E F

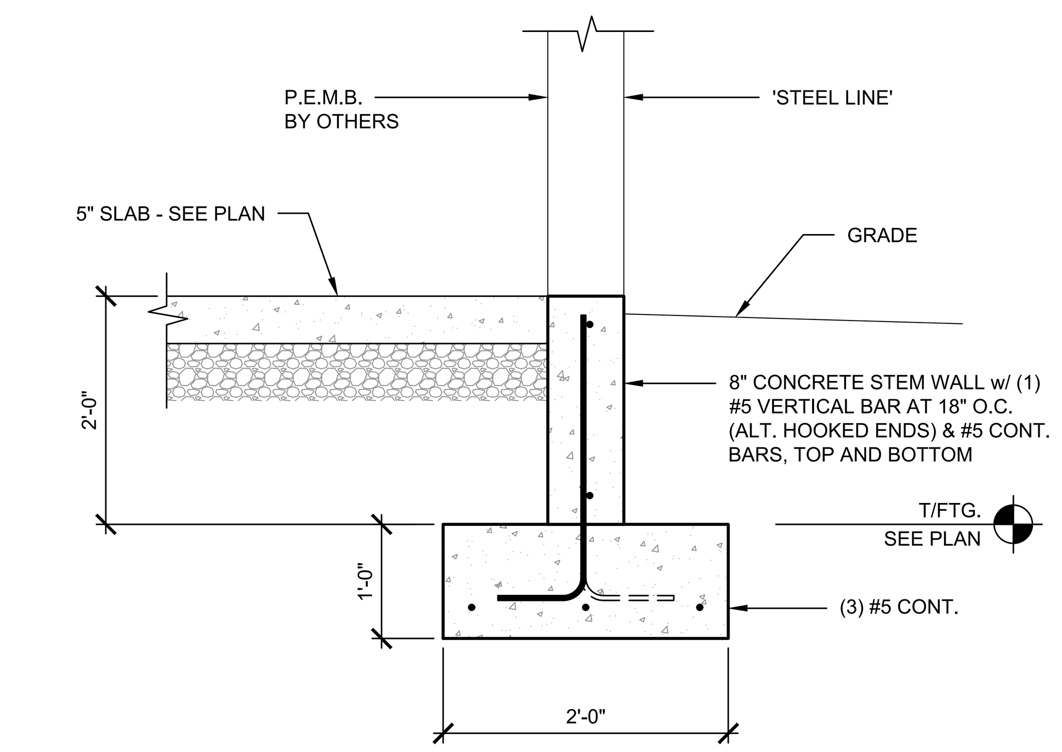

1 S3.1 TYPICAL DETAIL - PERIMETER STRIP FOOTING
SCALE: ¾" = 1'-0"

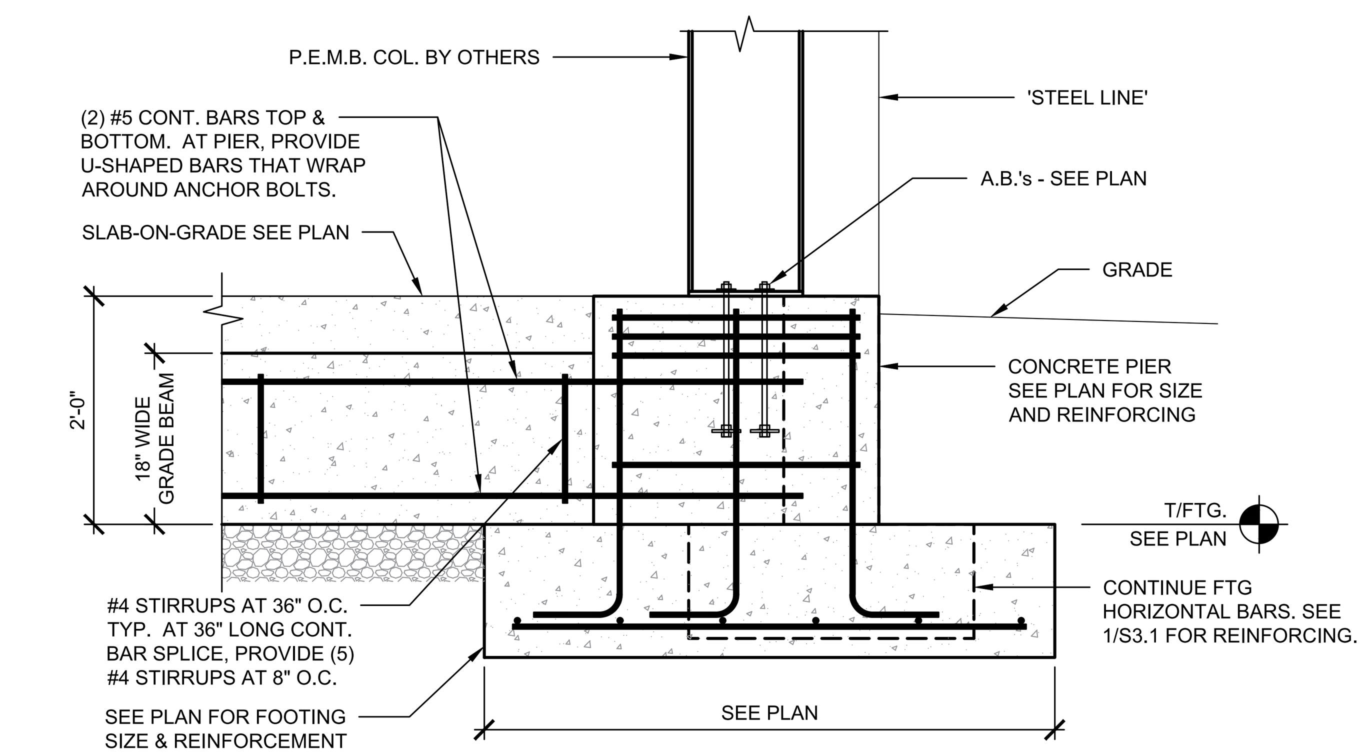

2 S3.1 TYPICAL DETAIL - PERIMETER COLUMN FOOTING
SCALE: ¾" = 1'-0"

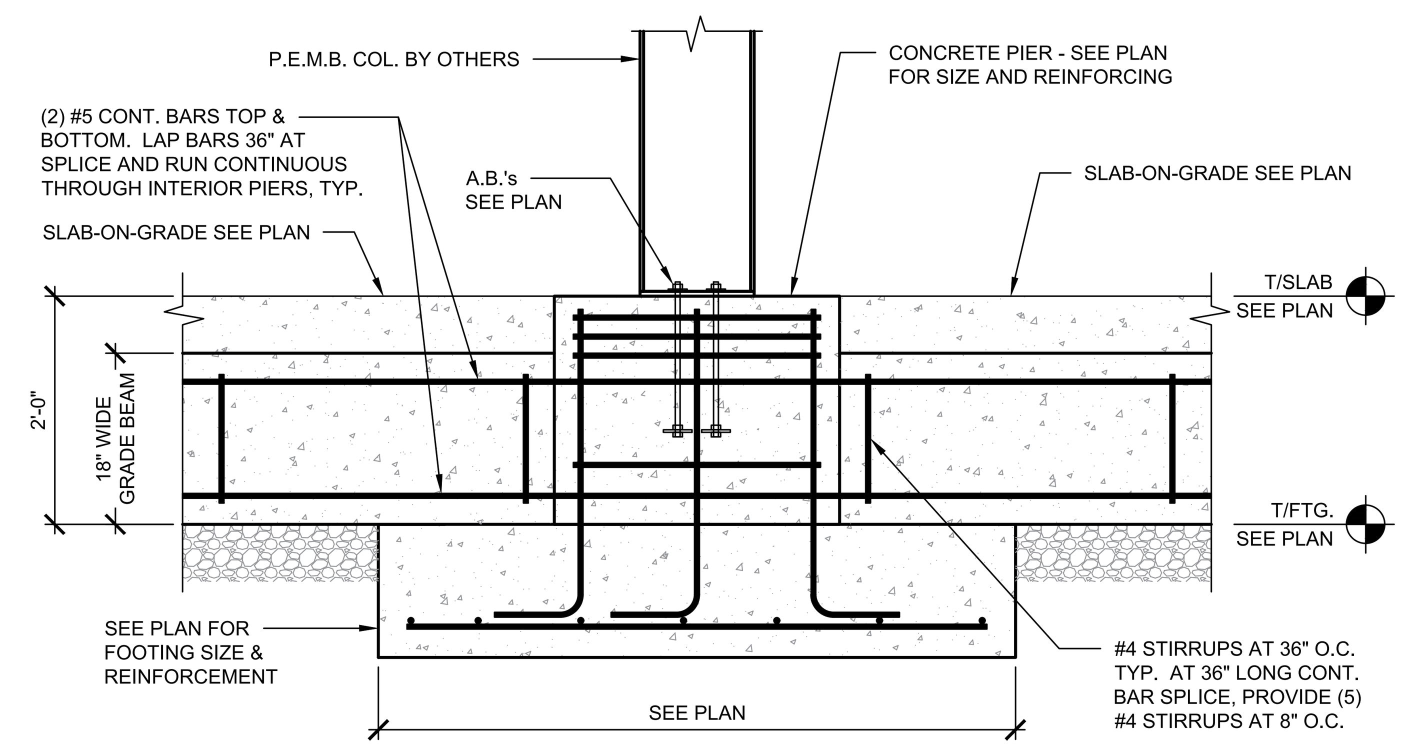

3 S3.1 TYPICAL DETAIL - INTERIOR COLUMN FOOTING
SCALE: ¾" = 1'-0"

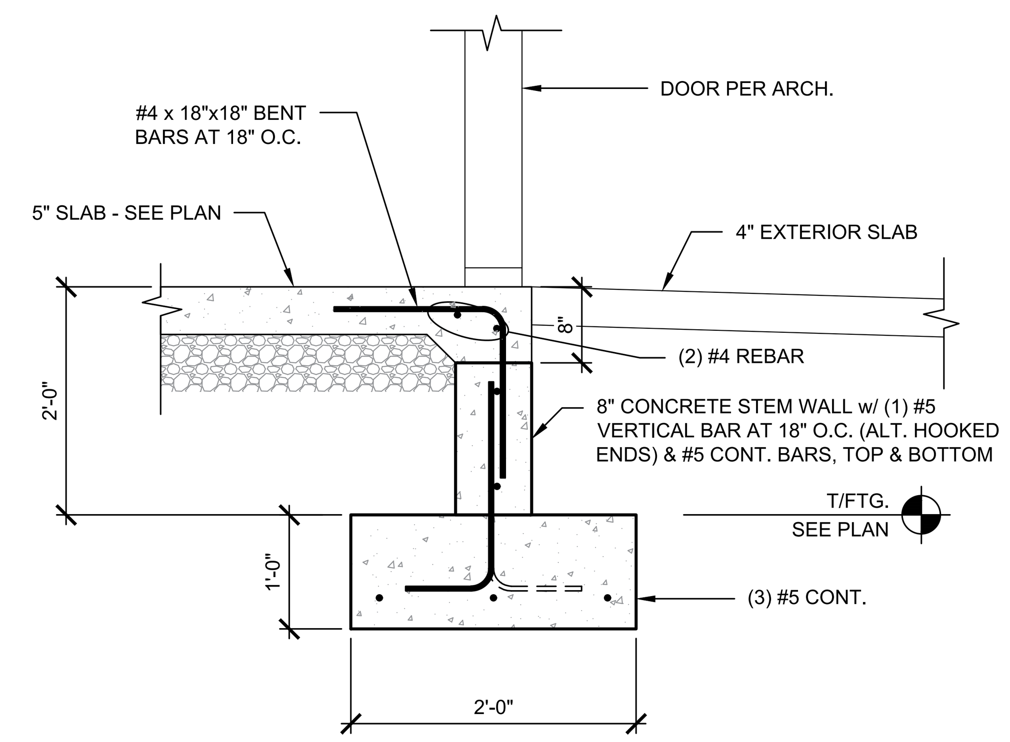

4 S3.1 TYPICAL DETAIL - SLAB POUR-THRU AT OPENING
SCALE: ¾" = 1'-0"

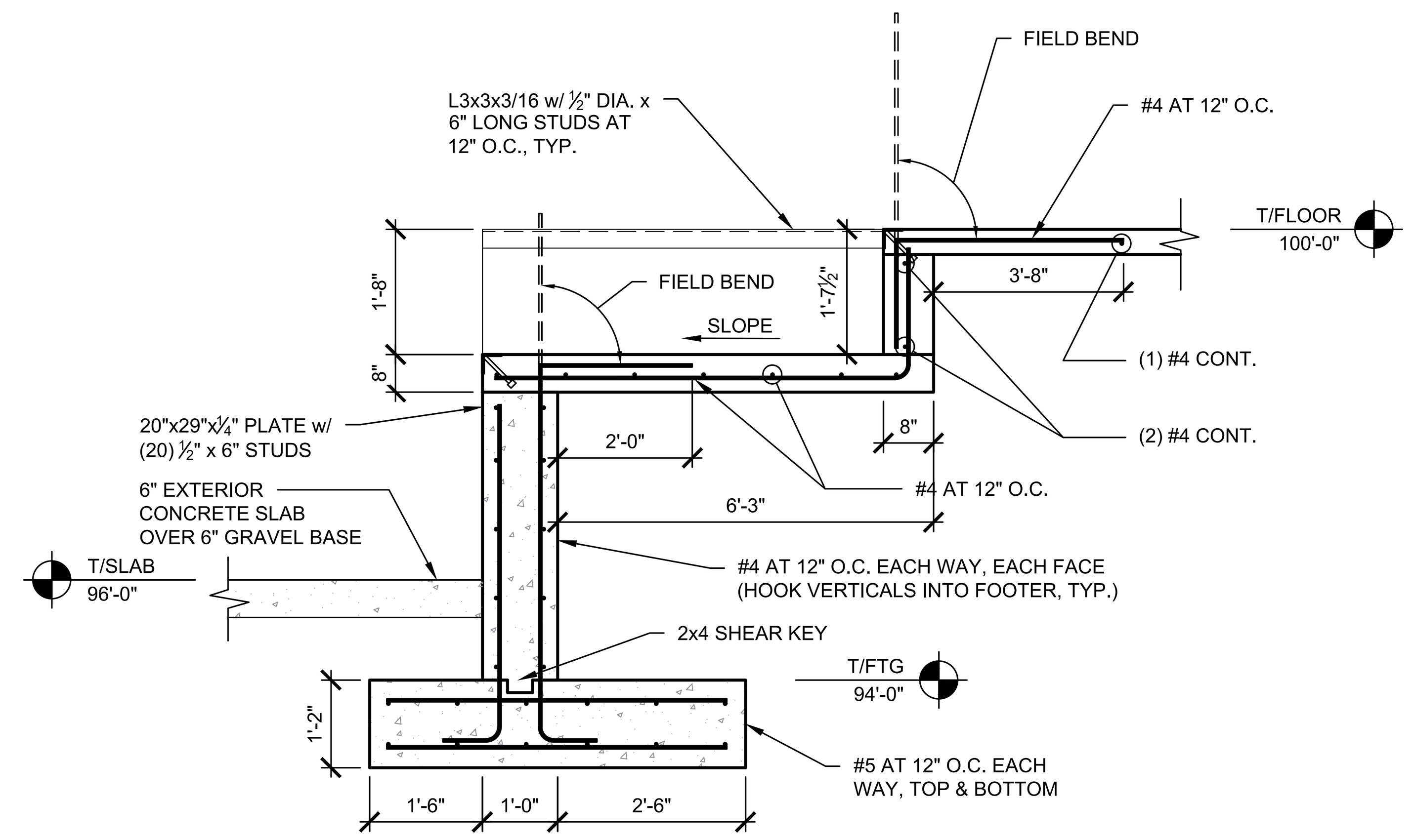

5 S3.1 TYPICAL DETAIL - LOADING DOCK
SCALE: ½" = 1'-0"

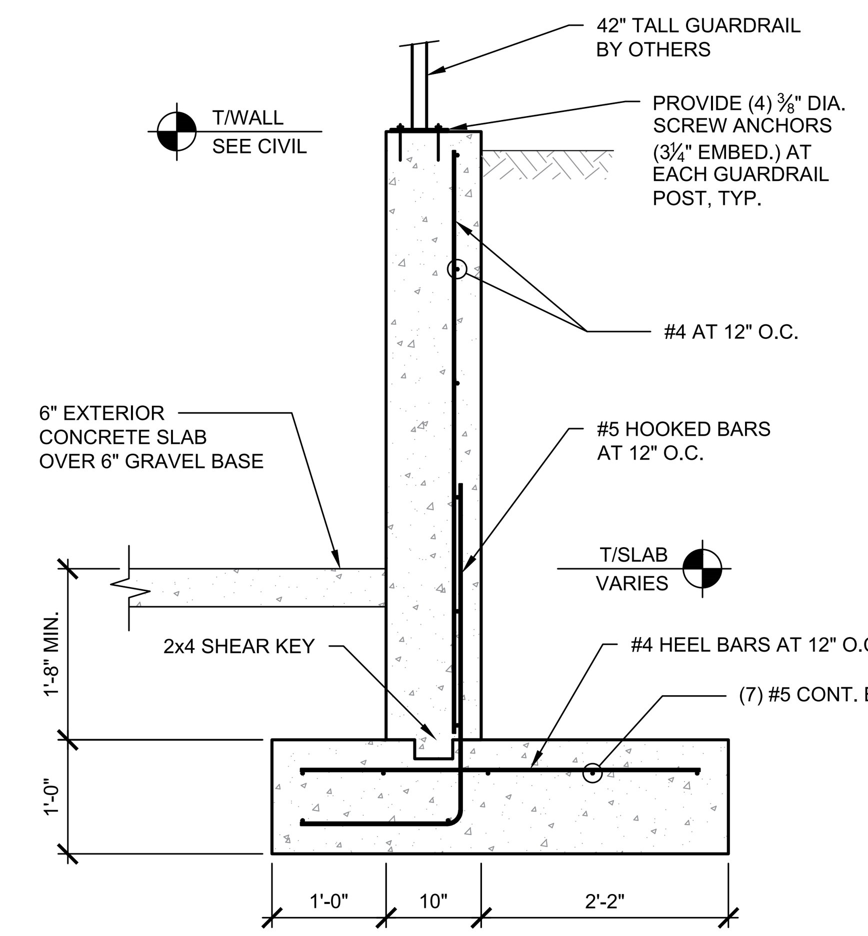

6 S3.1 TYPICAL DETAIL - SITE RETAINING WALL
SCALE: ¾" = 1'-0"

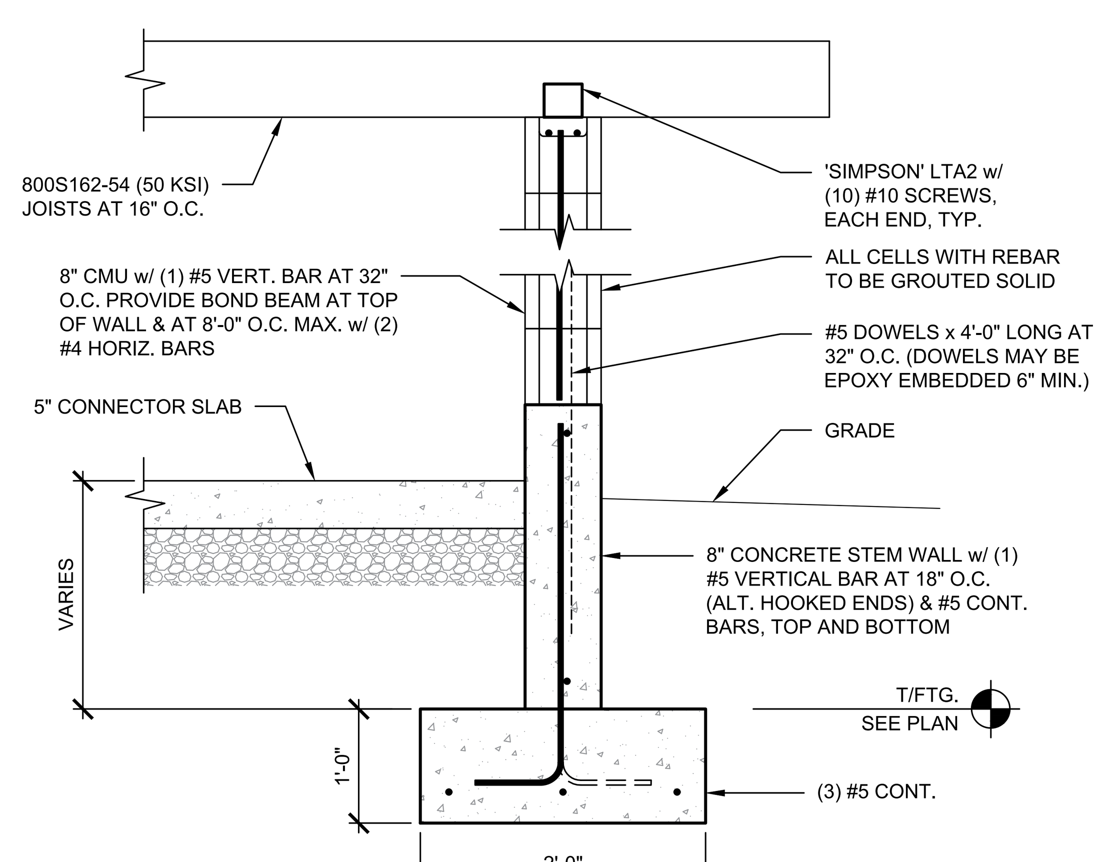

7 S3.1 TYPICAL DETAIL - CONNECTORS
SCALE: ¾" = 1'-0"

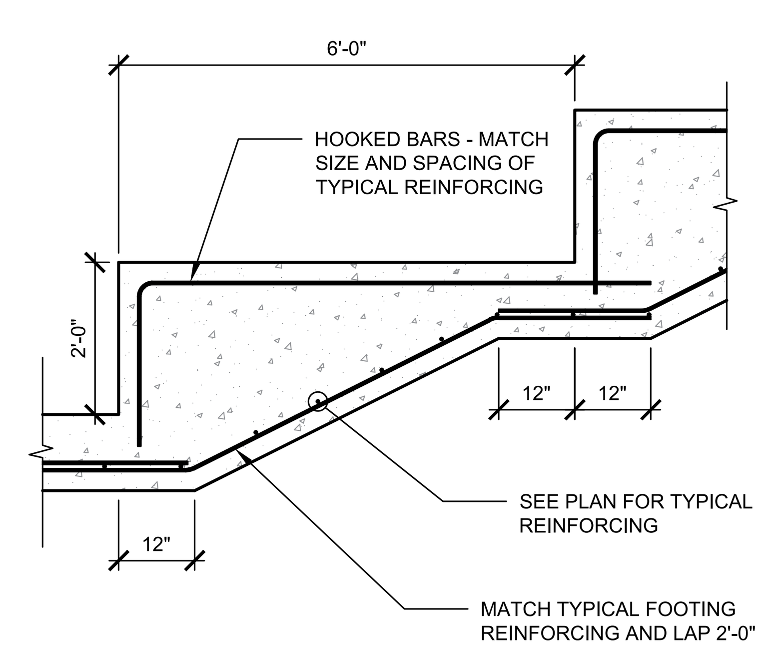

8 S3.1 TYPICAL DETAIL - FOOTING STEP
SCALE: ½" = 1'-0"

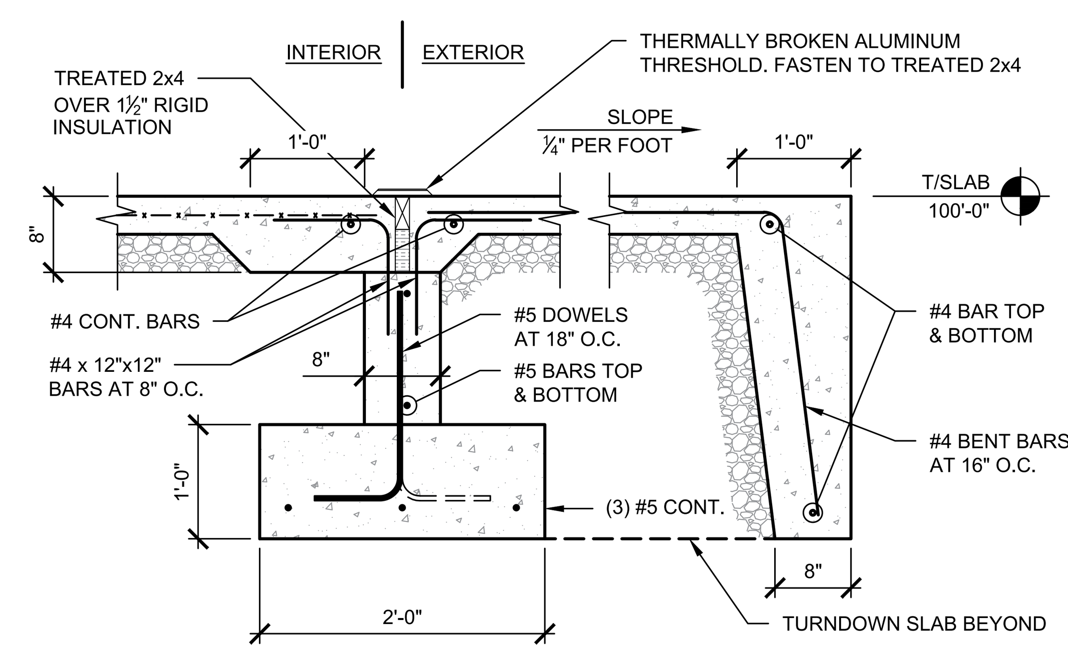

9 S3.1 TYPICAL DETAIL - STOOP
SCALE: ¾" = 1'-0"

L2 ENGINEERING

7949 Washington Woods Dr.
Dayton, OH 45459
www.LtwoE.com

NOT FOR CONSTRUCTION

STATE OF OHIO
JONATHAN MICHAEL
E-77926
REGISTERED PROFESSIONAL ENGINEER

NEW STORAGE BUILDING

REMINGTON SEED

5585 State Route 571
GREENVILLE, OHIO 45331

ISSUE

NO.	DATE	DESCRIPTION
	8/06/21	ISSUED FOR FINAL BID

DATE	8/06/2021
JOB NO.	2021056
DRAWN	JMR
CHECKED	JMR

COPYRIGHT © 2021 - App Architecture, Inc.

TITLE
STRUCTURAL DETAILS

SHEET NO.
S3.1

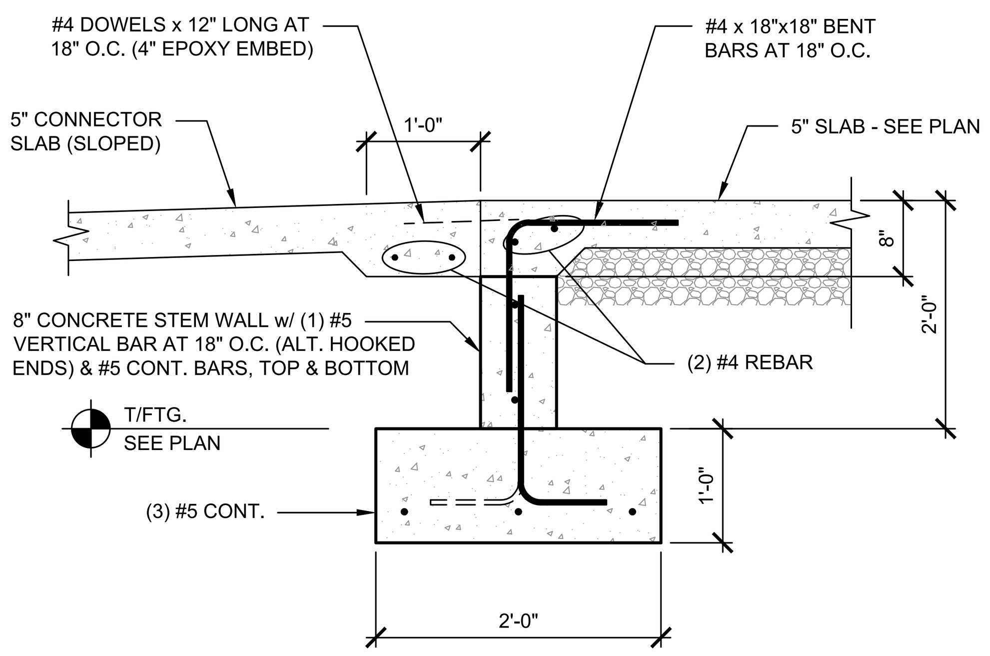

1 S3.2 TYPICAL DETAIL - POUR-THROUGH AT CONNECTOR
SCALE: ¾" = 1'-0"

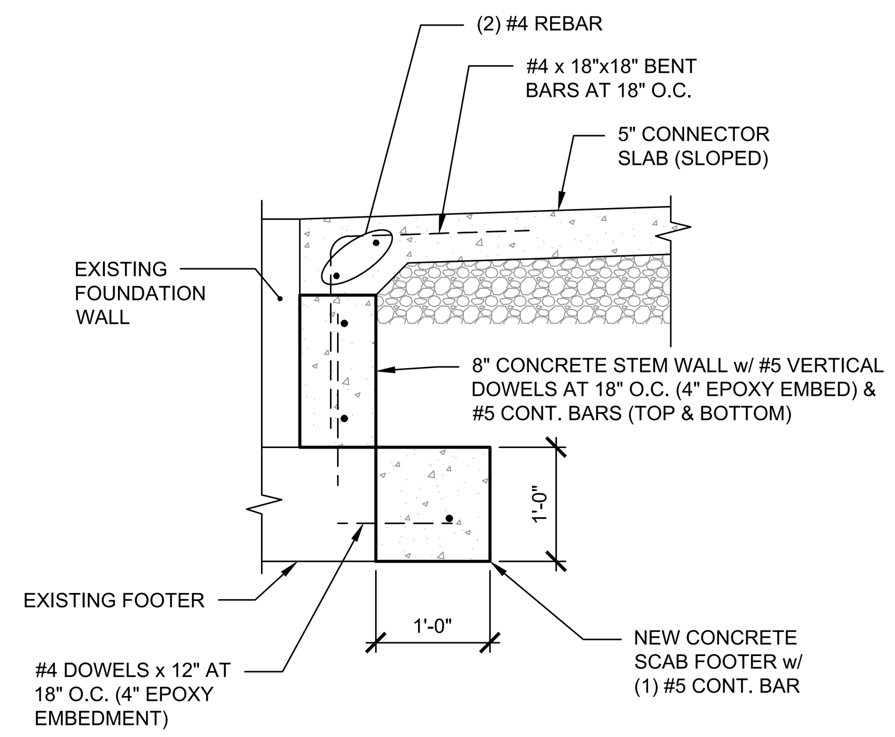

2 S3.2 TYPICAL DETAIL - POUR-THROUGH AT CONNECTOR & EXISTING BLDG.
SCALE: ¾" = 1'-0"

L2 ENGINEERING
7949 Washington Woods Dr.
Dayton, OH 45459
www.LtwoE.com

STATE OF OHIO JONATHAN MICHAEL REED PE-77926 REGISTERED PROFESSIONAL ENGINEER
NOT FOR CONSTRUCTION

NEW STORAGE BUILDING
REMINGTON SEED
5585 State Route 571 GREENVILLE, OHIO 45331

ISSUE

NO.	DATE	DESCRIPTION
	8/06/21	ISSUED FOR FINAL BID

DATE	8/06/2021
JOB NO.	2021056
DRAWN	JMR
CHECKED	JMR

COPYRIGHT © 2021 - App Architecture, Inc.

TITLE **STRUCTURAL DETAILS**

SHEET NO. **S3.2**